GENERAL LEGEND

ABBV.	SYMBOL	DESCRIPTION
G.C.		GENERAL CONTRACTOR
M.C.		MECHANICAL CONTRACTOR
E.C.		ELECTRICAL CONTRACTOR
T.C.C.		TEMPERATURE CONTROL CONTRACTOR
F.P.C.		FIRE PROTECTION CONTRACTOR
A.F.F.		ABOVE FINISHED FLOOR
A.F.G.		ABOVE FINISHED GRADE
B.F.F.		BELOW FINISHED FLOOR
B.F.G.		BELOW FINISHED GRADE
N.I.C.		NOT IN CONTRACT
(N)		NEW
		CONTROL WIRING
AD/AP		ACCESS DOOR/ACCESS PANEL
		DIRECTION OF FLOW IN PIPE
		PITCH PIPE DOWN IN DIRECTION OF ARROW
	E	PIPE CAP
	PRESSURE GAUGE WITH COCK	PRESSURE GAUGE WITH COCK
		FLEXIBLE PIPE CONNECTION
		STRAINER WITH BLOWDOWN VALVE
		STRAINER
CV		CHECK VALVE
BV		BALANCING VALVE
GV		GATE VALVE
		BALL VALVE
		GLOBE VALVE
		PRESSURE RELIEF VALVE
P/T		PRESSURE/TEMPERATURE TEST PLUG
TCV		PIPE ELBOW DOWN
		PIPE ELBOW UP
		TEE OFF BOTTOM OF PIPE
		TEE OFF TOP OF PIPE
		THERMOMETER
	X / XXX	X = SECTION/DETAIL NUMBER XXX = SHEET NUMBER WHERE SECTION/DETAIL IS DRAWN

PLUMBING LEGEND

ABBV.	SYMBOL	DESCRIPTION
ES		EMERGENCY SHOWER
EEW		EMERGENCY EYE WASH
EWC		ELECTRIC WATER COOLER
GDU		GARBAGE DISPOSAL UNIT
MSB		MOP SERVICE BASIN
S		SINK
SH		SHOWER
TP/TS		TRAP PRIMER/TRAP SEAL
U		URINAL
WC		WATER CLOSET
WHA		WATER HAMMER ARRESTER
PP		PLUMBING CIRC. PUMP
PET		PLUMBING EXPANSION TANK
RPBP		REDUCED PRESSURE BACKFLOW PREVENTER
DCBP		DOUBLE CHECK BACKFLOW PREVENTER
CW		DOMESTIC COLD WATER
HW		DOMESTIC HOT WATER
HWC		DOMESTIC HOT WATER CIRCULATING
G	G	NATURAL GAS
F	F	FIRE LINE
FS	FS	FIRE SPRINKLER
W		SANITARY WASTE BELOW FLOOR
W		SANITARY WASTE ABOVE FLOOR
V		SANITARY VENT
RDL	RDL	ROOF DRAIN ABOVE FLOOR OR GRADE
ODL	ODL	OVERFLOW DRAIN LEADER ABOVE FLOOR OR GRADE
SD		STORM DRAIN BELOW FLOOR OR GRADE
D	D	DRAIN PIPING
LS	LS	LAWN SPRINKLER
CA	CA	COMPRESSED AIR
FCO		FLOOR CLEANOUT
GCO		GRADE CLEANOUT
WCO	OR	WALL CLEANOUT
		PRESSURE REDUCING VALVE
		HOSE END DRAIN VALVE
		PLUG VALVE
		GAS COCK
TMV		THERMOSTATIC MIXING VALVE
		SHOCK ABSORBER (ELEVATION)
		SHOCK ABSORBER (PLAN)
		PIPE ANCHOR
HB/WH	OR	HOSE BIBB/WALL HYDRANT
	F	FLOW SWITCH
VTR		VENT THRU ROOF
FD		FLOOR DRAIN
FS		FLOOR SINK
RD/OD		ROOF DRAIN/OVERFLOW DRAIN
		SPLASH BLOCK
		SPLASH BLOCK WITH DOWNSPOUT NOZZLE

SHEET INDEX

SHEET NUMBER	PLUMBING & FIRE PROTECTION SHEET TITLE	SHEET SCALE	SHEET ISSUED
P 000	PLUMBING COVER SHEET - LEGEND, GENERAL NOTES AND SHEET INDEX	NONE	
P 111	PLUMBING FLOOR PLANS	1/8" = 1'-0"	
P 113	ROOF PLUMBING PLAN	1/8" = 1'-0"	
P 300	ENLARGED SCALE PLUMBING PLAN	1/4" = 1'-0"	
P 500	PLUMBING DETAILS	NONE	
P 600	PLUMBING SCHEDULES	NONE	
P 700	PLUMBING ISOMETRICS	NONE	

2

FIRE PROTECTION GENERAL NOTES

1. ALL WORK SHALL BE PER LOCAL BUILDING AND FIRE DISTRICT APPROVAL.
2. ALL PIPING SHALL CONFORM TO NFPA 13.
3. PROVIDE SHOP DRAWINGS FOR ALL WORK THAT ADHERERS TO ALL LOCAL CODES. BUILDING OWNER INSURANCE CARRIER, AND NFPA REQUIREMENTS.
4. IT SHALL BE THE FIRE PROTECTION CONTRACTOR'S RESPONSIBILITY TO CALCULATE, DESIGN AND INSTALL THE FIRE PROTECTION SYSTEM(S) CALLED FOR, INCLUDING ALL PIPING, FITTINGS, EQUIPMENT, DRAINS, SPRINKLERS, ETC. AS MAYBE REQUIRED FOR A COMPLETE, APPROVED AND OPERATIONAL FIRE PROTECTION SYSTEM IN ACCORDANCE WITH APPLICABLE NFPA STANDARDS.
5. THE ENTIRE BUILDING, WITH SPECIFIC EXCEPTIONS NOTED, SHALL BE PROVIDED AUTOMATIC SPRINKLER SYSTEM COVERAGE.
6. REFER TO ARCHITECTURAL REFLECTED CEILING PLANS FOR EXACT CEILING MOUNTING HEIGHTS AND LOCATION OF CEILING MOUNTED EQUIPMENT.
7. FURNISH SHOP DRAWINGS OF THE SYSTEM ALONG WITH HYDRAULIC CALCULATIONS AND PRODUCT DATA OF ALL PIPING, EQUIPMENT AND SPRINKLERS PROPOSED PRIOR TO INSTALLATION.
8. COORDINATE LOCATIONS OF ALL SPRINKLER WITH CEILING SYSTEMS AND ALL CEILING MOUNTED EQUIPMENT.
9. REFER TO ARCHITECTURAL DRAWINGS FOR LOCATION OF ALL FIRE RATED WALLS, SEAL ALL PIPE PENETRATIONS THROUGH FIRE RATED WALLS IN ACCORDANCE WITH THE BUILDING CODE.
10. ALL DRAIN TERMINATIONS SHALL BE EXTENDED TO DISCHARGE TO THE EXTERIOR. LOCATION AS APPROVED BY ATCHITECT/ENGINEER. DRAIN PIPING SHALL BE RUN CONCEALED ABOVE CEILING OR WITHIN APPROVED RECESSES OR CHASES WITHIN BUILDING. DISARGE DRAIN LINES A MAXIMUM OF 1'-6" ABOVE FINISHED GRADE. PROVIDE CONCRETE SPLASH BLOCKS AT DRAIN TERMINATIONS WHERE OUTLETS DISCHARGE INTO LANDSCAPED AREAS.
11. OFFSET PIPING AS MAYBE REQUIRED TO CLEAR EXISTING STRUCTURAL ELEMENTS, MECHANICAL AND ELECTRICAL EQUIPMENT. INCLUDE OFFSETS IN HYDRAULIC CALCULATION DATA.
12. FINAL LOCATIONS OF ALL FIRE SPRINKLER SHALL BE APPROVED BY THE ARCHITECT.
13. SPRINKLER INSTALLED IN FINISHED CEILING SYSTEMS SHALL BE CENTERED WITHIN CEILING TILES OR AT QUARTER POINTS ALONG THE LONGTUDINAL AXIS OF 2'x4' CEILING TILES.

PLUMBING GENERAL NOTES

1. FIELD VERIFY EXACT LOCATION OF ALL CONNECTION PRIOR TO CONSTRUCTION.
2. ROUGH-IN AND FINAL CONNECT ALL FIXTURES, EQUIPMENT, ETC.
3. CONTRACTOR SHALL INSPECT SITE TO THOROUGHLY FAMILIARIZE HIMSELF WITH THE AREA OF WORK. ANY DISCREPANCES BETWEEN THESE DOCUMENTS AND ACTUAL CONDITIONS SHALL BE REPORTED TO THE ARCHITECT/ENGINEER FOR RESOLUTION PRIOR TO BID PRICING. NO EXTRAS WILL BE ALLOWED DUE TO LACK OF KNOWLEDGE OF EXISTING CONDITIONS.
4. ALL WORK SHALL BE PER LOCAL BUILDING AND HEALTH DEPARTMENT REQUIREMENTS.
5. PROVIDE BALL VALVES ON ALL BRANCH LINES FOR BUILDING ISOLATION WHETHER SHOWN OR NOT.
6. REFERENCE HVAC DRAWINGS FOR EXACT LOCATION OF ALL HVAC EQUIPMENT REQUIRING PLUMBING CONNECTIONS. COORDINATE WITH HVAC CONTRACTOR EXACT PLUMBING CONNECTION REQUIREMENTS PRIOR TO COMMENCING WORK.
7. ALL STORM DRAINAGE PIPING WITHIN THE BOUNDARIES OF THE BUILDING SHALL BE SLOPED AT 1/4" PER FOOT UNLESS OTHERWISE NOTED.
8. ALL VENTS THROUGH THE ROOF (VTR) SHALL BE POSITIONED A MINIMUM OF 15'-0" FROM ANY OUTSIDE AIR INTAKE.
9. REFERENCE ARCHITECTURAL DRAWINGS FOR LOCATIONS OF ALL FIRE RATED WALLS. ALL PIPE PENETRATIONS THROUGH FIRE RATED WALLS SHALL BE SEALED IN ACCORDANCE WITH THE BUILDING CODE.
10. OFFSET ALL PIPING AS REQUIRED TO AVOID STRUCTURAL MEMBERS, CANTS, FLASHING, MECHANICAL, OR ELECTRICAL EQUIPMENT.
11. PROVIDE CHROME PLATED SET SCREW TYPE ESCUTCHEONS AT ALL EXPOSED PIPE PENETRATIONS THROUGH WALLS AND CASEWORK.
12. VERIFY AND COORDINATE EXACT SIZE, LOCATION, AND ELEVATION OF KITCHEN PLUMBING ROUGH-INS WITH KITCHEN EQUIPMENT CONTRACTOR PRIOR TO CONSTRUCTION.
13. PROVIDE ACCESSIBLE SHUT-OFF VALVES FOR ALL KITCHEN EQUIPMENT REQUIRING WATER SERVICE.
14. ALL EXPOSED PIPING IN THE KITCHEN AREA TO BE A CLEANABLE SURFACE PER LOCAL HEALTH DEPARTMENT.
15. PLUMBING CONTRACTORS SHALL PROVIDE ALL INDIRECT WASTE PIPING AND MAKE FINAL CONNECTIONS TO SINKS, KITCHEN EQUIPMENT, ETC. VERIFY SIZES AND LOCATIONS WITH KITCHEN EQUIPMENT CONTRACTOR'S SHOP DRAWINGS.
16. COMPLY WITH ALL BUILDING AND HEALTH DEPARTMENT REGULATIONS FOR PLUMBING INSTALLATION. VERIFY ALL REQUIREMENTS PRIOR TO SUBMITTING BID OR COMMENCING WORK.
17. PROVIDE FLEXIBLE CONNECTOR WITH QUICK COUPLER CONNECTION TO ALL MOVEABLE GAS APPLIANCES IN KITCHEN.
18. FLUSH MOUNT ALL FLOOR SINKS FOR FLOOR DRAINAGE USE.
19. ALL GAS PIPING, VALVES, PRV, ETC. SHALL MEET THE REQUIREMENTS OF THE INTERNATIONAL FUEL GAS CODE.

10/17/2019 3:10:43 PM

SEH

COLORADO LICENSED PROFESSIONAL ENGINEER
JOHN D. RUSSELL
39020
10-18-19
PROFESSIONAL ENGINEER

Owner
City of Greeley

970.350.9777

Architect/ Civil Engineer/ Structural
Short Elliott Hendrickson, Inc.
2000 South Colorado Boulevard
Tower One, Suite 6000
Denver, Colorado 80222
720.540.6800

Landscape Architect
DHM Design
900 South Broadway
Denver, Colorado 80209
303.892.5566

Mechanical Engineer
The Ballard Group, Inc
2525 South Wadsworth Blvd, Suite 200
Lakewood, CO 80227
303.988.4514

Electrical Engineer
CMO Consulting Eng
11646 Sun Bear Trail
Golden, CO 80403
303.875.4037

The Ballard Group, Inc.
Mechanical Consulting Engineers
2525 S. Wadsworth Blvd, Suite 200
Lakewood, CO 80227
(303) 988-4514

City of Greeley
GREELEY FIRE STATION #2
2301 Reservoir Rd, Greeley, CO 80634

City of Greeley

This drawing is an instrument of service and shall remain the property of Short Elliott Hendrickson, Inc. (SEH). This drawing, concepts and ideas contained herein shall not be used, reproduced, revised, or retained without the express written approval of SEH.

Submission or distribution of this drawing to meet official or regulatory requirements or for purposes in connection with the project is not be construed as publication in derogation of any of the rights of SEH.

COPYRIGHT © 2019
Short Elliott Hendrickson, Inc.
All Rights Reserved

SEH Project	150268
Checked By	TRH
Drawn By	JDR

Project Status	Issue Date
30 % DESIGN	6/26/2019
75% DESIGN	8/29/2019
100% DESIGN	10/18/2019

Revision Issue

Rev. #	Description	Date
2	ADDENDUM 2	10/18/2019

PLUMBING COVER SHEET - LEGEND, GENERAL NOTES AND SHEET INDEX

P
000

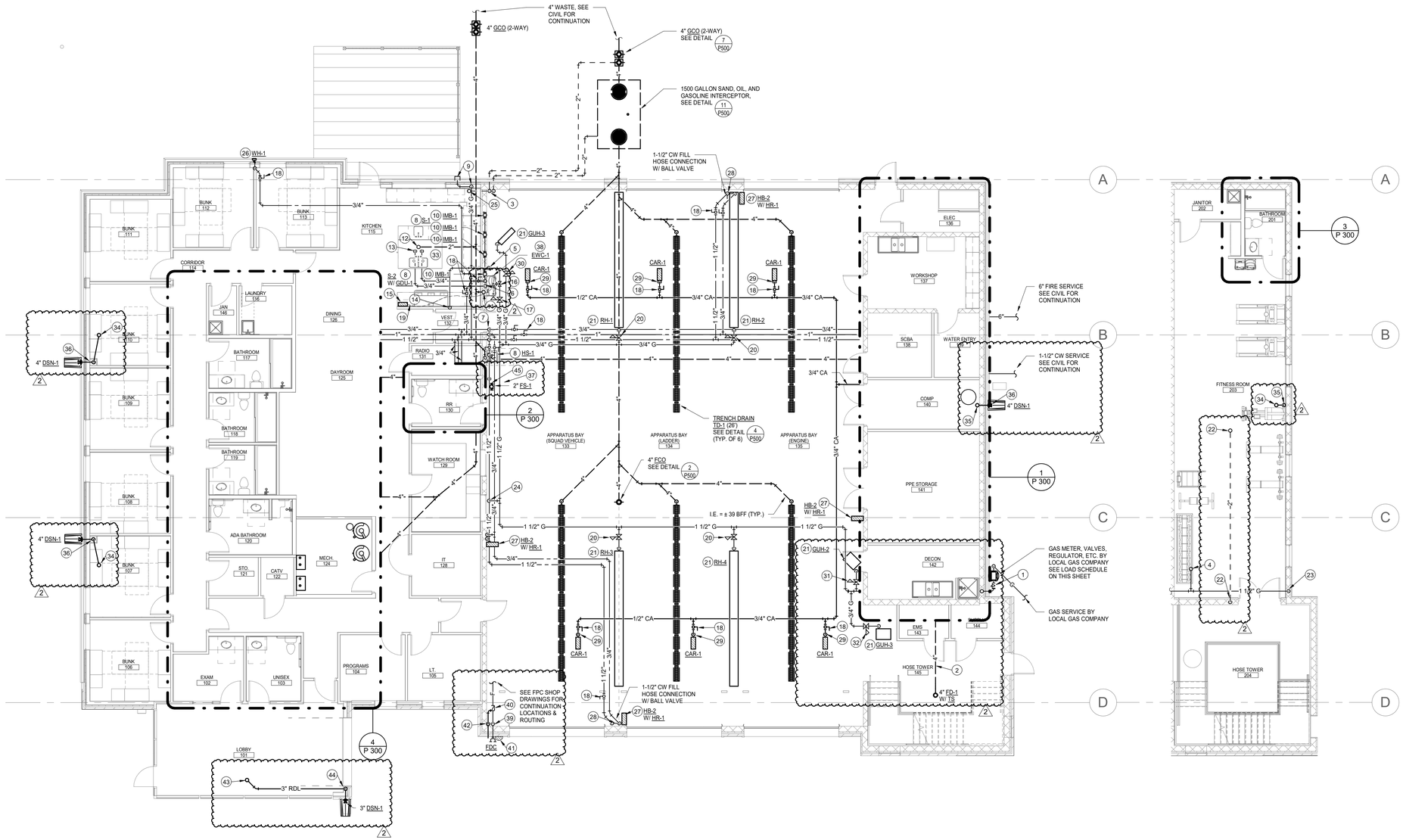

LEVEL 1 PLUMBING FLOOR PLAN

SCALE: 1/8" = 1'-0"

LEVEL 2 PLUMBING FLOOR PLAN

SCALE: 1/8" = 1'-0"

PLUMBING KEYNOTES:

1. 1-1/2" PLUG VALVE ON HOUSE SIDE OF METER.
2. COMBINATION WASTE & VENT SYSTEM.
3. (2) 2" VENT RISE ON WALL & CONNECT AT MIN. 12" ABOVE FINISHED GRADE. 2" VENT RISE.
4. 3/4" GAS RISE TO ROOF.
5. 3/4" GAS DOWN ON WALL & OFFFSET ABOVE CEILING.
6. 3/4" CW & 3/4" HW DOWN IN WALL , 3/4" CW & 3/4" DOWN & OFFSET BELOW FLOOR.
7. 1-1/2" CW, 1" HW & 3/4" HWC DOWN ON WALL.
8. 2" WASTE DOWN, 1-1/2" VENT RISE, 1/2" CW & 1/2" HW TO SINK/HS.
9. 3/4" GAS DOWN IN WALL & OFFSET AT 24" AFF W/ GAS COCK & CAP FOR BBQ CONNECTION.
10. 1/2" CW TO ICE MAKE BOX.
11. 1-1/2" VENT RISE & OFFSET AT STRUCTURE TO 3" VTR.
12. 1-1/2" VENT RISE TO AIR ADMITTANCE VALVE BELOW COUNTERTOP.
13. 3/4" CW & 3/4" HW RISE FROM BELOW FLOOR & OFFSET TO FIXTURES.
14. 3/4" GAS DOWN & CONNECT TO OVEN/RANGE W/ GAS COCK & 6" DIRT LEG PER DETAIL 1/P500.
15. GAS SOLENOID CONTROL SWITCH (GCS-1) ON WALL.
16. GAS SOLENOID VALVE (GSV-1) W/ SERVICE ACCESS.
17. GAS PRESSURE REGULATING VALVE (PRV) 2.0 PSI TO 8" WC, 200 MBH INPUT AT S.L.
18. BALL VALVE (FULL SIZE) W/ SERVICE ACCESS.
19. CONTROL VOLTAGE (120/60/1Ø) BY TTC.
20. GAS PRESSURE REGULATING VALVE (PRV) 2.0 PSI TO 14" WC, 80 MBH INPUT AT S.L.
21. CONNECT 3/4" GAS TO RADIANT HEATER/ GUH W/ GAS COCK & 6" DIRT LEG.
22. 2" VENT RISE FROM LEVEL BELOW & OFFSET AT STRUCTURE TO 3" VTR.
23. 1-1/2" GAS RISE IN WALL & OFFSET ABOVE CEILING.
24. 1-1/2" GAS DOWN TO LOWER ROOF.
25. 2" VENT RISE & OFFSET AT STRUCTURE TO 3" VTR.
26. 3/4" CW DOWN IN WALL TO 3/4" WH-1.
27. 3/4" CW & 3/4" HW TO HB-2, 3/4" TO HR-1.
28. 1-1/2" CW DOWN ON WALL.
29. CONNECT 3/4" CA TO CAR-1.
30. GAS PRESSURE REGULATING VALVE (PRV) 2.0 PSI TO 14" WC, 250 MBH INPUT AT S.L.
31. GAS PRESSURE REGULATING VALVE (PRV) 2.0 PSI TO 14" WC, 150 MBH INPUT AT S.L.
32. GAS PRESSURE REGULATING VALVE (PRV) 2.0 PSI TO 14" WC, 100 MBH INPUT AT S.L.
33. 1" INDIRECT WASTE TO AIR GAP TO GDU & 1/2" HW TO DISHWASHER, PER CODE.
34. 4" RDL DOWN FROM 4" RD-1.
35. 4" RDL DOWN IN WALL.
36. 4" RDL IN WALL TO 4" DSN AT 18" ABOVE SPLASH BLOCK.
37. 1/2" CW TO ICE MAKER.
38. 2" WASTE DOWN ,1-1/2" VENT RISE, 1/2" CW TO EWC.
39. 4" FIRE LINE DOWN ON WALL TO FDC.
40. U.L. CHECK VALVE W/ AUTO BALL DRIP & DRAIN DOWN ON WALL.
41. AUDIBLE/ VISUAL ALARM MOUNTED AT 10" MIN. ABOVE GRADE.
42. 3/4" DRAIN DOWN ON WALL & DISCHARGE ON GRADE.
43. 3" RDL DOWN FROM 3" RD-1.
44. 3" RDL DOWN IN WALL TO 3" DSN AT 18" ABOVE SPLASH BLOCK.
45. INDIRECT WASTE TO AIRGAP TO FLOOR SINK.

GAS LOAD SCHEDULE:

APPLIANCE:	LOAD:
BOILER B-1	399.0 MBH
BOILER B-2	399.0 MBH
GAS FIRED WATER HEATER GWH-1	150.0 MBH
GAS FIRED WATER HEATER GWH-2	150.0 MBH
RADIANT HEATER RH-1	80.0 MBH
RADIANT HEATER RH-2	80.0 MBH
RADIANT HEATER RH-3	80.0 MBH
RADIANT HEATER RH-4	80.0 MBH
ROOFTOP UNIT RTU-1	200.0 MBH
ROOFTOP UNIT RTU-2	300.0 MBH
ROOFTOP UNIT RTU-3	200.0 MBH
BBQ GRILL	100.0 MBH
OVEN/RANGE	100.0 MBH
GAS UNIT HEATER GUH-1	250.0 MBH
GAS UNIT HEATER GUH-2	150.0 MBH
GAS UNIT HEATER GUH-3	100.0 MBH
TOTAL	2,818.0 MBH INPUT @ S.L. (2 P.S.I. REQUIRED) P.C. TO COORDINATE W/ LOCAL GAS COMPANY.

10/17/2019 3:10:51 PM

SEH

COLORADO LICENSED PROFESSIONAL ENGINEER
JOHN V. PERRY
39020
10-18-19
PROFESSIONAL ENGINEER

Owner
City of Greeley

970.350.9777

Architect/ Civil Engineer/ Structural
Short Elliott Hendrickson, Inc.
2000 South Colorado Boulevard
Tower One, Suite 6000
Denver, Colorado 80222
720.540.6800

Landscape Architect
DHM Design
900 South Broadway
Denver, Colorado 80209
303.892.5566

Mechanical Engineer
The Ballard Group, Inc
2525 South Wadsworth Blvd, Suite 200
Lakewood, CO 80227
303.988.4514

Electrical Engineer
CMO Consulting Eng
11646 Sun Bear Trail
Golden, CO 80403
303.875.4037

The Ballard Group, Inc.
Mechanical Consulting Engineers
2525 S. Wadsworth Blvd, Suite 200
Lakewood, CO 80227
(303) 988-4514

City of Greeley
GREELEY FIRE STATION #2
2301 Reservoir Rd, Greeley, CO 80634

City of Greeley

This drawing is an instrument of service and shall remain the property of Short Elliott Hendrickson, Inc. (SEH). This drawing, concepts and ideas contained herein shall not be used, reproduced, revised, or retained without the express written approval of SEH.

Submission or distribution of this drawing to meet official or regulatory requirements or for purposes in connection with the project is not be construed as publication in derogation of any of the rights of SEH.

COPYRIGHT © 2019
Short Elliott Hendrickson, Inc.
All Rights Reserved

SEH Project	150268
Checked By	TRH
Drawn By	JOR

Project Status	**Issue Date**
30 % DESIGN	6/26/2019
75% DESIGN	8/29/2019
100% DESIGN	10/18/2019

Revision Issue

Rev. #	Description	Date
1	Addendum 01	09/18/2019
2	ADDENDUM 2	10/18/2019

PLUMBING FLOOR PLANS

P
111

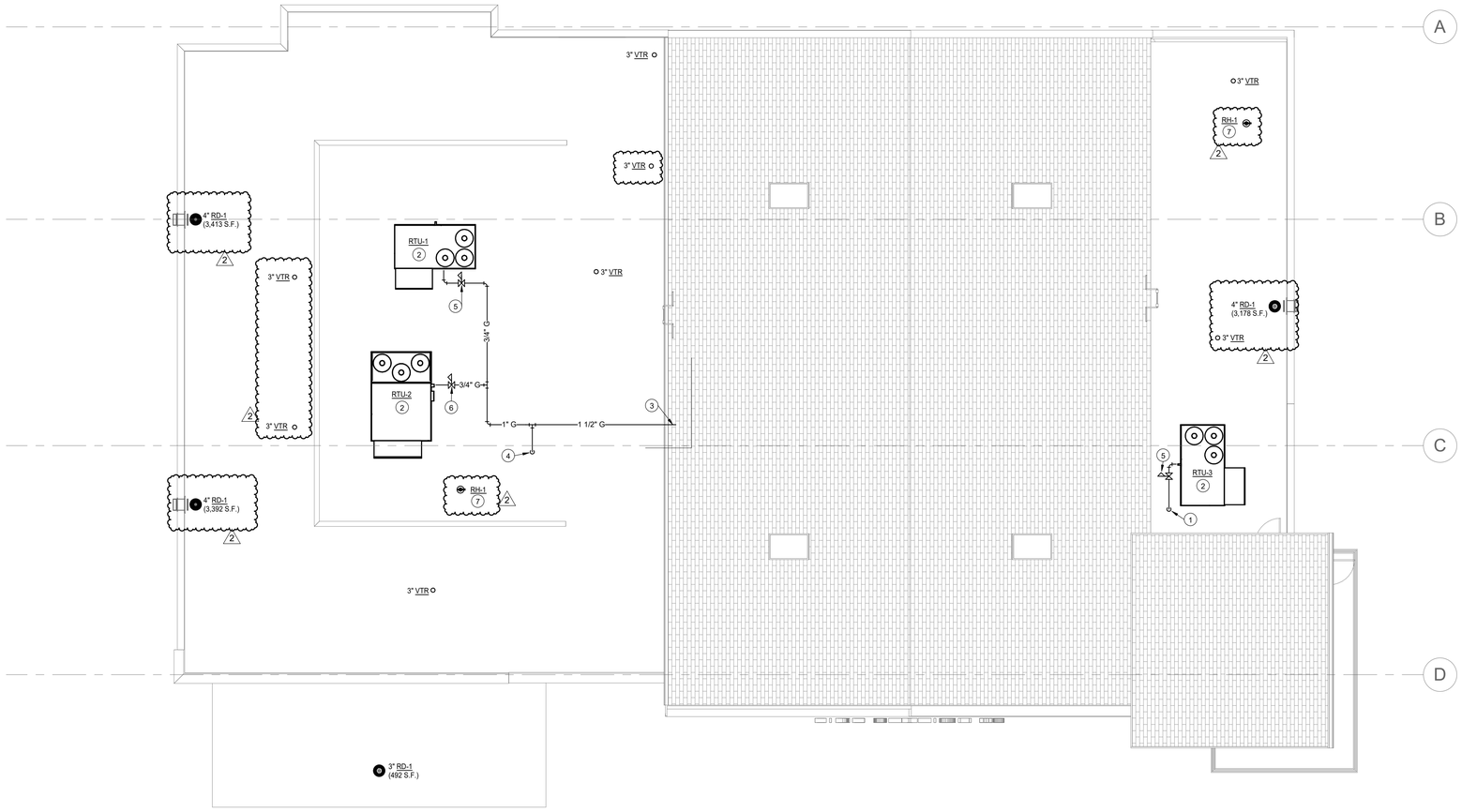

ROOF PLUMBING KEYNOTES:

1. 3/4" GAS RISE FROM BELOW.
2. CONNECT 1" GAS TO ROOFTOP UNIT (RTU) W/ GAS COCK & 6" DIRT LEG.
3. 1-1/2" GAS RISE.
4. 1-1/2" GAS DOWN.
5. GAS PRESSURE REGULATING VALVE (PRV) 2.0 PSI TO 10" WC, 200 MBH INPUT AT S.L.
6. GAS PRESSURE REGULATING VALVE (PRV) 2.0 PSI TO 10" WC, 300 MBH INPUT AT S.L.
7. 3/4" CW RISE TO ROOF HYDRANT.

ROOF PLUMBING PLAN

SCALE: 1/8" = 1'-0"

10/17/2019 3:10:51 PM

SEH

COLORADO LICENSED
I VERIFIED
TODD R. LAU
39020
10-18-19
PROFESSIONAL ENGINEER

Owner
City of Greeley

970.350.9777

Architect/ Civil Engineer/ Structural
Short Elliott Hendrickson, Inc.
2000 South Colorado Boulevard
Tower One, Suite 6000
Denver, Colorado 80222
720.540.6800

Landscape Architect
DHM Design
900 South Broadway
Denver, Colorado 80209
303.892.5566

Mechanical Engineer
The Ballard Group, Inc
2525 South Wadsworth Blvd, Suite 200
Lakewood, CO 80227
303.988.4514

Electrical Engineer
CMO Consulting Eng
11646 Sun Bear Trail
Golden, CO 80403
303.875.4037

The Ballard Group, Inc.
Mechanical Consulting Engineers
2525 S. Wadsworth Blvd, Suite 200
Lakewood, CO 80227
(303) 988-4514

City of Greeley

GREELEY FIRE STATION #2

2301 Reservoir Rd, Greeley, CO 80634

City of Greeley

This drawing is an instrument of service and shall remain the property of Short Elliott Hendrickson, Inc. (SEH). This drawing, concepts and ideas contained herein shall not be used, reproduced, revised, or retained without the express written approval of SEH.

Submission or distribution of this drawing to meet official or regulatory requirements or for purposes in connection with the project is not be construed as publication in derogation of any of the rights of SEH.

COPYRIGHT © 2019
Short Elliott Hendrickson, Inc
All Rights Reserved

SEH Project	150268
Checked By	TRH
Drawn By	JDR

Project Status	**Issue Date**
30 % DESIGN	6/26/2019
75% DESIGN	8/29/2019
100% DESIGN	10/18/2019

Revision Issue

Rev. #	Description	Date
1	Addendum 01	09/18/2019
2	ADDENDUM 2	10/18/2019

ROOF PLUMBING PLAN

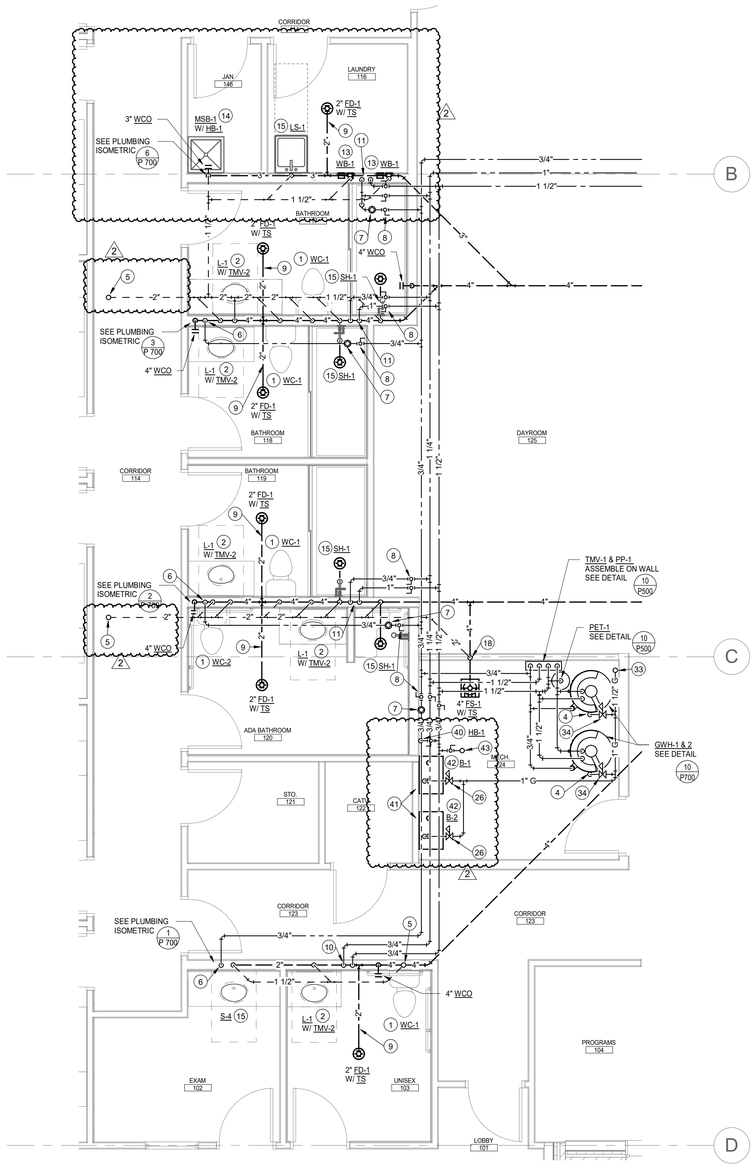

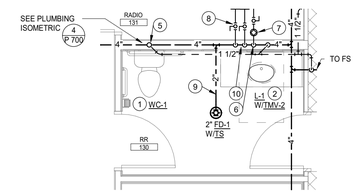

2 P 300 ENLARGED SCALE PLUMBING PLAN

SCALE: 1/4" = 1'-0"

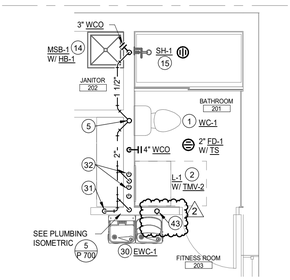

3 P 300 ENLARGED SCALE PLUMBING PLAN

SCALE: 1/4" = 1'-0"

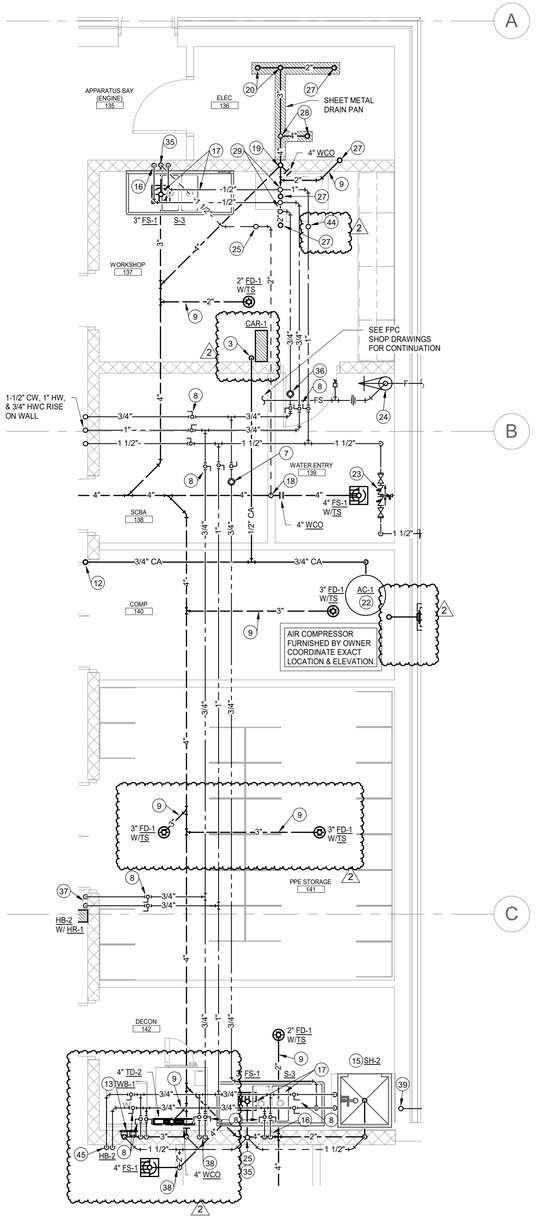

1 P 300 ENLARGED SCALE PLUMBING PLAN

SCALE: 1/4" = 1'-0"

ENLARGED SCALE PLUMBING KEYNOTES:

1. 4" WASTE DOWN, 2" VENT RISE, 1/2" CW TO WC.
2. 2" WASTE DOWN, 1-1/2" VENT RISE, 1/2" HW & 1/2" CW TO LAV/TMV.
3. 1/2" CA DOWN ON WALL TO CAR-1.
4. CONNECT 3/4" GAS TO GWH W/ GAS COCK & 6" DIRT LEG.
5. 2" VENT RISE TO 3" VTR.
6. 3/4" HWC DOWN IN WALL & CONNECT TO 3/4" HW.
7. 1/2" BALANCING VALVE W/ SERVICE ACCESS, BALANCE TO 0.5 GPM.
8. BALL VALVE (FULL SIZE) W/ SERVICE ACCESS.
9. COMBINATION WASTE & VENT SYSTEM.
10. 3/4" CW & 3/4" HW DOWN IN WALL & OFFSET TO FIXTURES.
11. 1" CW & 3/4" HW DOWN IN WALL & OFFSET TO FIXTURES.
12. 3/4" CA RISE.
13. 3" WASTE DOWN, 1-1/2" VENT RISE, 1/2" HW & 1/2" CW TO WASHER BOX.
14. 3" WASTE DOWN, 1-1/2" VENT RISE, 3/4" CW TO HB, 1/2" HW & 1/2" CW TO MSB.
15. 2" WASTE DOWN, 1-1/2" VENT RISE, 1/2" HW & 1/2" CW TO LS/SH/SINK.
16. 1/2" HW & 1/2" CW TO SINK FAUCET.
17. INDIRECT WASTE TO AIR GAP TO FLOOR SINK.
18. 4" WASTE DOWN, 2" VENT RISE TO FS/FD.
19. 4" WASTE STACK RISE & OFFSET ABOVE CEILING
20. 3" WASTE DOWN FROM MSB FROM LEVEL ABOVE.
21. 1/2" CA DOWN ON WALL TO CA-1 AT 60" AFF.
22. CONNECT 3/4" CA TO AIR COMPRESSOR.
23. 1-1/2" CW SERVICE ENTRY, SEE WATER ENTRY DETAIL 9/P500.
24. 6" FIRE SERVICE, SEE FIRE ENTRY DETAIL 6/P500.
25. 2" VENT RISE TO LEVEL ABOVE.
26. GAS PRESSURE REGULATING VALVE (PRV) 2.0 PSI TO 13" WC, 399BH INPUT AT S.L.
27. 2" WASTE DOWN FROM LAV/TMV/EWC/FD/SH FROM LEVEL ABOVE.
28. 4" WASTE DOWN & 2" VENT RISE FROM WATER CLOSET FROM LEVEL ABOVE.
29. 3/4" CW, 3/4" HW & 3/4" HWC RISE TO LEVEL ABOVE.
30. 2" WASTE DOWN, 1-1/2" VENT RISE, 1/2" CW TO EWC.
31. 2" VENT RISE FROM LEVEL BELOW.
32. 3/4" CW & 3/4" HW RISE FROM LEVEL BELOW & OFFSET TO FIXTURES.
33. 1-1/2" GAS DOWN FROM ROOF.
34. GAS PRESSURE REGULATING VALVE (PRV) 2.0 PSI TO 14" WC, 150 MBH INPUT AT S.L.
35. 3" WASTE DOWN & 1-1/2" VENT RISE FOR FLOOR SINK.
36. 1/2" BALANCING VALVE W/ SERVICE ACCESS, BALANCE TO 1.0 GPM.
37. 3/4" CW & 3/4" HW DOWN ON WALL TO HB-2 & HR-1.
38. 3/4" CW & 3/4" HW DOWN TO WASHER.
39. 1-1/2" GAS RISE IN WALL.
40. 3/4" CW DOWN ON WALL TO HB-1.
41. ROUTE CONDENSATE ON WALL & AIRGAP TO FLOOR SINK.
42. CONNECT 1" GAS TO BOILER W/ GAS COCK & 6" DIRT LEG.
43. 3/4" CW RISE TO ROOF HYDRANT ABOVE ON ROOF.
44. 3/4" CW RISE TO LEVEL ABOVE.
45. 3/4" CW & 3/4" HW DOWN ON WALL TO HB-2.

10/17/2019 3:10:53 PM

SEH

COLORADO LICENSED PROFESSIONAL ENGINEER 39020 10-18-19

Owner
City of Greeley

970.350.9777

Architect/ Civil Engineer/ Structural
Short Elliott Hendrickson, Inc.
2000 South Colorado Boulevard
Tower One, Suite 6000
Denver, Colorado 80222
720.540.6800

Landscape Architect
DHM Design
900 South Broadway
Denver, Colorado 80209
303.892.5566

Mechanical Engineer
The Ballard Group, Inc
2525 South Wadsworth Blvd, Suite 200
Lakewood, CO 80227
303.988.4514

Electrical Engineer
CMO Consulting Eng
11646 Sun Bear Trail
Golden, CO 80403
303.875.4037

The Ballard Group, Inc.
Mechanical Consulting Engineers
2525 S. Wadsworth Blvd, Suite 200
Lakewood, CO 80227
(303) 988-4514

City of Greeley

GREELEY FIRE STATION #2

2301 Reservoir Rd, Greeley, CO 80634

City of Greeley Colorado

This drawing is an instrument of service and shall remain the property of Short Elliott Hendrickson, Inc. (SEH). This drawing, concepts and ideas contained herein shall not be used, reproduced, revised, or retained without the express written approval of SEH.

Submission or distribution of this drawing to meet official or regulatory requirements or for purposes in connection with the project is not be construed as publication in derogation of any of the rights of SEH.

COPYRIGHT © 2019 Short Elliott Hendrickson, Inc. All Rights Reserved

SEH Project	150268
Checked By	TRH
Drawn By	JDR

Project Status	**Issue Date**
30 % DESIGN	6/26/2019
75% DESIGN	8/29/2019
100% DESIGN	10/18/2019

Revision Issue

Rev. #	Description	Date
1	Addendum 01	09/18/2019
2	ADDENDUM 2	10/18/2019

ENLARGED SCALE PLUMBING PLAN

P 300

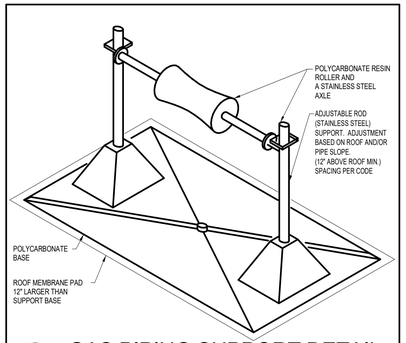

15 P500 **GAS PIPING SUPPORT DETAIL**

SCALE: NONE

NOTE: APPROVED MANUFACTURES MIRO, B-LINE

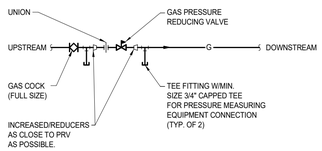

13 P500 **GAS PRESSURE REGULATING VALVE PIPING DETAIL**

SCALE: NONE

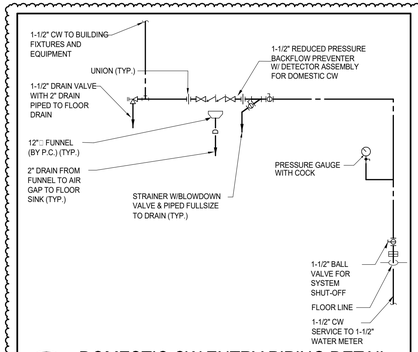

9 P500 **DOMESTIC CW ENTRY PIPING DETAIL**

SCALE: NONE

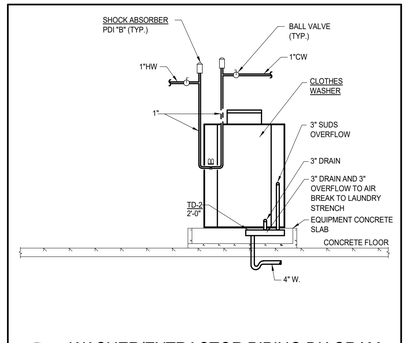

5 P500 **WASHER/EXTRACTOR PIPING DIAGRAM**

SCALE: NONE

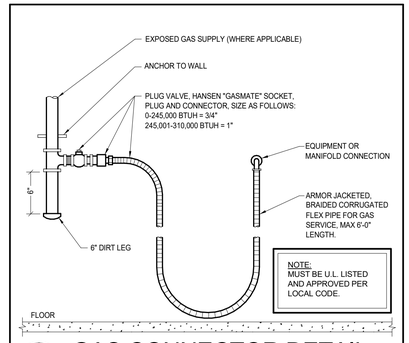

1 P500 **GAS CONNECTOR DETAIL**

SCALE: NONE (OVEN ONLY)

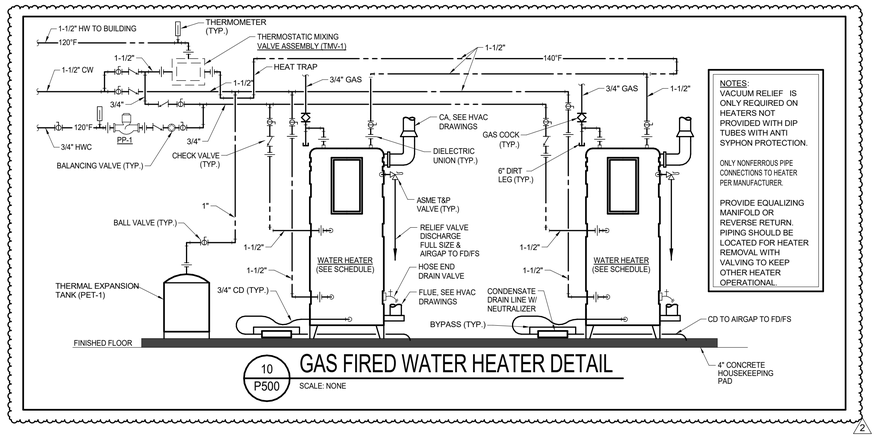

NOTES:
VACUUM RELIEF IS ONLY REQUIRED ON HEATERS NOT PROVIDED WITH DIP TUBES WITH ANTI SYPHON PROTECTION.

ONLY NONFERROUS PIPE CONNECTIONS TO HEATER PER MANUFACTURER

PROVIDE EQUALIZING MANIFOLD OR REVERSE RETURN. PIPING SHOULD BE LOCATED FOR HEATER REMOVAL WITH VALVING TO KEEP OTHER HEATER OPERATIONAL.

10 P500 **GAS FIRED WATER HEATER DETAIL**

SCALE: NONE

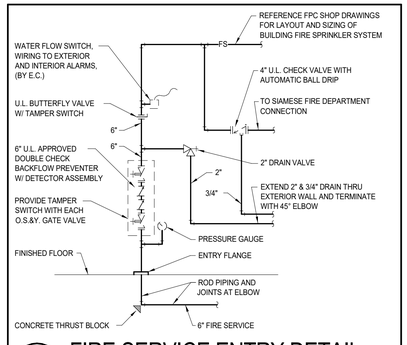

6 P500 **FIRE SERVICE ENTRY DETAIL**

SCALE: NONE

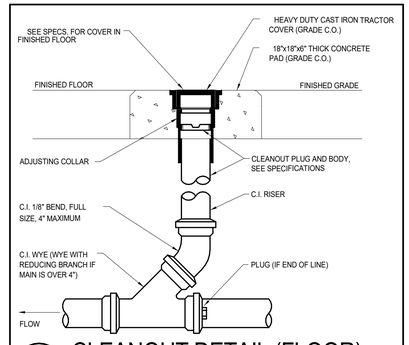

2 P500 **CLEANOUT DETAIL (FLOOR)**

SCALE: NONE

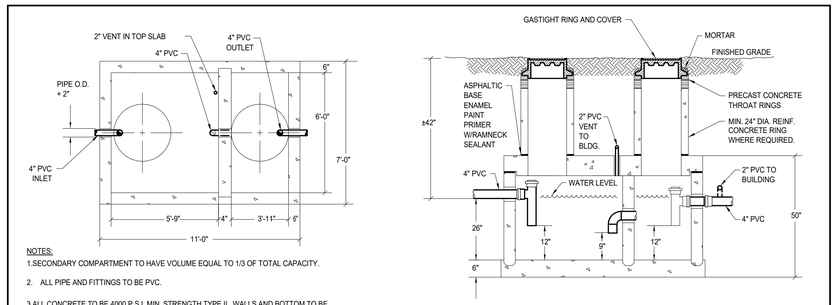

NOTES:
1. SECONDARY COMPARTMENT TO HAVE VOLUME EQUAL TO 1/3 OF TOTAL CAPACITY.
2. ALL PIPE AND FITTINGS TO BE PVC.
3. ALL CONCRETE TO BE 4000 P.S.I. MIN. STRENGTH TYPE II. WALLS AND BOTTOM TO BE REINFORCED THROUGH OUT WITH 2" x 16", 6/10 REMESH OR HEAVIER. COVERS TO BE REINFORCED LONGITUDINALLY WITH NO. 6 REBAR ON 6" CENTERS. NO4 REBAR ON CENTERS WIDTHWAYS, AND NO. 8 REBAR DIAGONALLY AROUND ACCESS HOLES.
4. INTERCEPTOR, MANHOLE, AND COVER TO BE H-20 TRAFFIC DUTY RATED.

11 P500 **SAND, OIL, AND GASOLINE INTERCEPTOR DETAIL**

SCALE: NONE — 1500 GALLONS CAPACITY

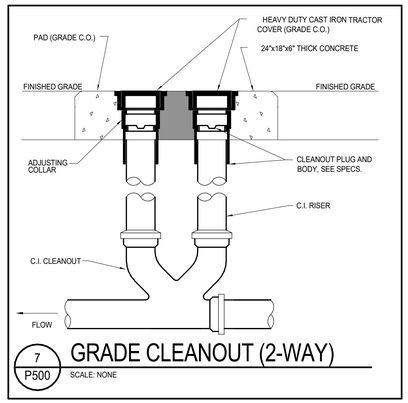

7 P500 **GRADE CLEANOUT (2-WAY)**

SCALE: NONE

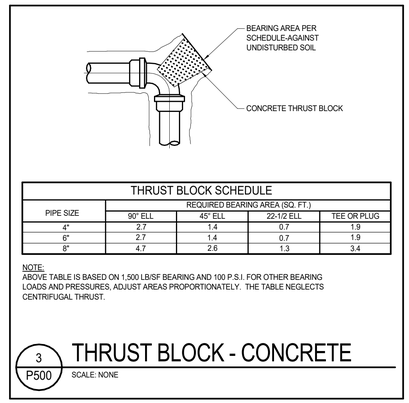

THRUST BLOCK SCHEDULE				
PIPE SIZE	REQUIRED BEARING AREA (SQ. FT.)			
	90° ELL	45° ELL	22-1/2 ELL	TEE OR PLUG
4"	2.7	1.4	0.7	1.9
6"	2.7	1.4	0.7	1.9
8"	4.7	2.6	1.3	3.4

NOTE:
ABOVE TABLE IS BASED ON 1,500 LB/SF BEARING AND 100 P.S.I. FOR OTHER BEARING LOADS AND PRESSURES, ADJUST AREAS PROPORTIONATELY. THE TABLE NEGLECTS CENTRIFUGAL THRUST.

3 P500 **THRUST BLOCK - CONCRETE**

SCALE: NONE

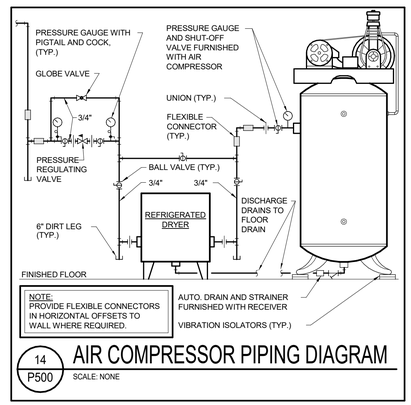

NOTE:
PROVIDE FLEXIBLE CONNECTORS IN HORIZONTAL OFFSETS TO WALL WHERE REQUIRED.

14 P500 **AIR COMPRESSOR PIPING DIAGRAM**

SCALE: NONE

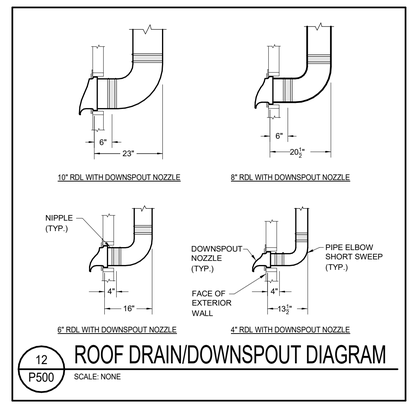

12 P500 **ROOF DRAIN/DOWNSPOUT DIAGRAM**

SCALE: NONE

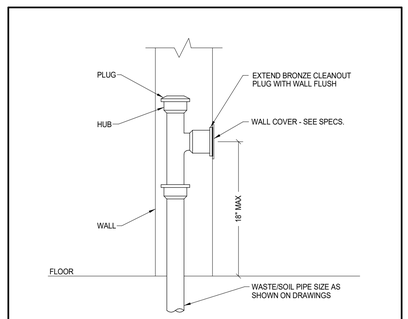

8 P500 **CLEANOUT DETAIL (WALL)**

SCALE: NONE

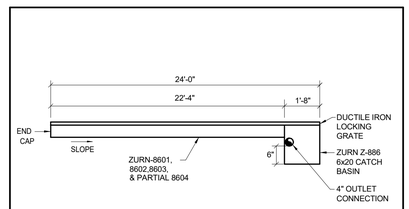

NOTE:
INSTALL ZURN SYSTEM PER MANUF. REQUIREMENTS.

4 P500 **TRENCH DRAIN DETAIL (TD-1)**

SCALE: NONE

10/17/2019 3:10:53 PM

SEH

COLORADO LICENSED PROFESSIONAL ENGINEER — JOHN D. RIGGENBACH — 39020 — 10-18-19

Owner
City of Greeley
970.350.9777

Architect/ Civil Engineer/ Structural
Short Elliott Hendrickson, Inc.
2000 South Colorado Boulevard
Tower One, Suite 6000
Denver, Colorado 80222
720.540.6800

Landscape Architect
DHM Design
900 South Broadway
Denver, Colorado 80209
303.892.5566

Mechanical Engineer
The Ballard Group, Inc
2525 South Wadsworth Blvd, Suite 200
Lakewood, CO 80227
303.988.4514

Electrical Engineer
CMO Consulting Eng
11646 Sun Bear Trail
Golden, CO 80403
303.875.4037

The Ballard Group, Inc.
Mechanical Consulting Engineers
2525 S. Wadsworth Blvd, Suite 200
Lakewood, CO 80227
(303) 988-4514

City of Greeley

GREELEY FIRE STATION #2

2301 Reservoir Rd, Greeley, CO 80634

City of Greeley Colorado

This drawing is an instrument of service and shall remain the property of Short Elliott Hendrickson, Inc. (SEH). This drawing, concepts and ideas contained herein shall not be used, reproduced, revised, or retained without the express written approval of SEH.

Submission or distribution of this drawing to meet official or regulatory requirements or for purposes in connection with the project is not be construed as publication in derogation of any of the rights of SEH.

COPYRIGHT © 2019 Short Elliott Hendrickson, Inc. All Rights Reserved

SEH Project	150268
Checked By	TRH
Drawn By	JDR

Project Status	**Issue Date**
30 % DESIGN	6/26/2019
75% DESIGN	8/29/2019
100% DESIGN	10/18/2019

Revision Issue

Rev. #	Description	Date
2	ADDENDUM 2	10/18/2019

PLUMBING DETAILS

P 500

WATER HEATER SCHEDULE (GAS-FIRED)

PLAN CODE	MANUFACTURER & MODEL NO.	STORAGE GALLONS	G.P.H. RECOVERY @ 100° RISE	BTUH INPUT @ SEA LEVEL	EFF. FACTOR	FLUE SIZE	TANK SIZE		OPER. WEIGHT	REMARKS
							DIA.	HT.		
GWH-1&2	AO SMITH BTH-150	100	178	150,000	98.0	SEE HVAC	27 3/4"	76 1/2"	1,400 lbs.	NOTE: 1, 2, 3

NOTES:
1. ASME T & P RELIEF
2. 120/60/1Ø CONTROL VOLTAGE
3. SET TANK TEMPERATURE AT 140°F

PLUMBING PUMP SCHEDULE

PLAN CODE	MANUFACTURER & MODEL NO.	TYPE	SERVICE	IMP. DIA. (IN)	GPM	HEAD	% EFF.	ELECTRICAL				VIBRATION ISOLATION	CONTROL	WEIGHT (LBS)	REMARKS
								HP (BHP)	VOLTS	PH	RPM				
PP-1	B&G PL-36B	IN-LINE	HWC	-	4	25'	-	1/6	115	1	3,300	INTEGRAL	24/7		NOTE: 1

NOTES:
1. OPERATION 24/7.

AIR COMPRESSOR SCHEDULE

PLAN CODE	MANUFACTURER & MODEL NO.	SCFM @ S.L.	DISCHARGE PSIG	RECEIVER SIZE (GALS.)	ELECTRICAL				REMARKS
					HP	VOLTS	PH	RPM	
AC-1	SUPPLIED BY OWNER, INSTALLED BY P.C.	24.3 FREE AIM	175	80	7.5	460	3	1,750	NOTE: 1

NOTES:
1. PRESSURE SWITCH CONTROLS

2

PLUMBING FIXTURE SCHEDULE

PLAN CODE	DESCRIPTION	MANUF.	MODEL	COLOR FINISH	FITTINGS	MANUF.	MODEL	COLOR FINISH	REMARKS
WC-1	WATER CLOSET (1.28 GPF)	AMERICAN STANDARD	212AA.104	WHITE	SEAT	OLSONITE	95SSCT	WHITE	NOTE: 2, 3
L-1	LAVATORY-UNDERCOUNTER (ACCESSIBLE) (0.5 GPM)	AMERICAN STANDARD	0497.221	WHITE	FAUCET	AMERICAN STANDARD	7186.201	CHROME	NOTE: 1, 4, 5, 6
S-1	SINK-UNDERCOUNTER (ACCESSIBLE) (1.5 GPM)	ELKAY	ELUHAD-1418	STAINLESS STEEL	FAUCET	DELTA	9159-DST	CHROME	NOTE: 1, 5, 6, 9
S-2	SINK- 2 COMP. DEEP (1.5 GPM)	ELKAY	ELUH361710DBG	STAINLESS STEEL	FAUCET	DELTA	9159-DST	CHROME	NOTE: 1, 6, 9
S-3	SINK (1.5 GPM)	ELKAY	WNSF8230L	WHITE	FAUCET	CHICAGO	510-GC-613ALABCP	CHROME	NOTE: 1, 13
S-4	SINK-UNDERCOUNTER (ACCESSIBLE) (1.5 GPM)	ELKAY	ELUHAD-1212	STAINLESS STEEL	FAUCET	DELTA	27C4924	CHROME	NOTE: 1, 5, 6, 9
HS-1	SINK - HAND SINK	ADVANCED TABCO	7-PS-75	STAINLESS STEEL	FAUCET	DELTA	27C1954	CHROME	NOTE: 1, 4, 5, 13
MSB-1	MOP SERVICE BASIN	FIAT	MSB2424	WHITE	FAUCET	ZURN	Z8431M1SCRC	CHROME	NOTE: 7
EWC-1	ELECTRIC WATER COOLER (HIGH/LOW) W/ BOTTLE FILL STATION	ELKAY	EZSTL8WSSK	STAINLESS STEEL	-	-	-	-	NOTE: 1, 1/5 H.P. 120/60/1Ø
SH-1	SHOWER (ACCESSIBLE) 1.5 GPM HEAD	BY G.C.			VALVE HEAD	AMERICAN STANDARD	R110 VALVE NOTE: 16	CHROME	NOTE: 12, 14, 16
SH-2	SHOWER - DECONTAM (ACCESSIBLE)	AQUATICS	1363BFS	WHITE	VALVE HEAD	AMERICAN STANDARD	R110 VALVE NOTE: 16	CHROME	NOTE: 10, 14, 16
IMB-1	ICE MAKER BOX	SEE SPEC.							
GDU-1	GARBAGE DISPOSAL UNIT	IN-SINK-ERATOR	BADGER 5	-	-	-	-	-	1/2 H.P. 120/60/10
LS-1	LAUNDRY SINK (1.5 GPM)	FIAT	FL-1	WHITE	FAUCET	DELTA	27C4944	CHROME	NOTE: 1, 4
FD-1	FLOOR DRAIN	SEE SPEC.							
FD-2	FLOOR DRAIN	SEE SPEC.							
FD-3	FLOOR DRAN	SEE SPEC.							
RH-1	ROOF HYDRANT	SEE SPEC.							
HB-1 & 2	HOSE BIB	SEE SPEC.					NOTE: 16		
WH-1	WALL HYDRANT	SEE SPEC.							
TD-1	TRENCH DRAIN - APPARATUS BAY								SEE DETAIL 4/P500
TD-2	TRENCH DRAIN - DECONTAM	ZURN	Z886-HPS						NOTE: 17
HR-1	HOSE REEL	GRAINGER LIBERTY	2LRK9	POWDER COATED FINISH	–	–	–	–	NOTE: 8

NOTES:
1. 17 GA. P-TRAP, ANGLE SUPPLIES WITH W.H. STOPS.
2. ANGLE SUPPLY W/ W.H. STOPS.
3. HANDLE ON ACCESS SIDE OF TOILET.
4. GRID STRAINER, 0.5 GPM FLOW RESTRICTOR.
5. INSULATION KIT FOR SUPPLIES AND DRAIN.
6. COORDINATE HOLE PUNCH IN SOLID SURFACE COUNTERTOP FOR FAUCET.
7. VACCUM BREAKER, CHECK STOPS.
8. PROVIDE 125" OF 3/4" HOSE & BALL VALVE.
9. CHROME CUP STRAINER, 1.5GPM FLOW RESTRICTOR.
10. PROVIDE W/ GRAB BARS, SEAT & CURTAIN.
11. COPENHAGEN GRATE
12. W/FD-1 (SQUARE GRATE).
13. DRAIN VALVE BELOW COMPARTMENT W/ GRID STRAINER, 1.5 GPM FAUCET.
14. (2) HEADS, (1) FIXED AT 78" AND (1) HANDHELD WITH BAR, HEAD, HOSE AND DIVERTER.
15. W/ CONCEALED ARM CARRIERS.
16. R110 VALVE, R422 DIVERTER WITH T342430.000 TRIM KIT, T186.508 TRIM KIT (FLUENT), 1660.766 HANDHELD HEAD (1.50 GPM), 1662.236 36" BAR, AND 8888035.000 STAINLESS STEEL HOSE.
17. 2'-0" LONG, BOTTOM OUTLET, STAINLESS STEEL HEELPROOF GRATE.

2

MISCELLANEOUS PLUMBING FIXTURE SCHEDULE

PLAN CODE	DESCRIPTION	MANUFACTURER	MODEL	FINISH	REMARKS
PET-1	PLUMBING EXPANSION TANK	AMTROL	ST-25V	STEEL	NOTE: 1
TMV-1	THERMOSTATIC MIXING VALVE	POWERS	LFSH1432	ROUGH BRASS	NOTES: 2, 5
TMV-2	THERMOSTATIC MIXING VALVE	POWERS	LFLM495	ROUGH BRASS	NOTE: 3
CAR-1	COMPRESSED AIR REEL	GRAINGER SPEEDAIRE	2CUA7		NOTES: 4, 6, 7
GSV-1	GAS SOLENOID VALVE	SEE SPEC.			
GCS-1	GAS CONTROL VALVE	SEE SPEC.			

NOTES:
1. HANG FROM STRUCTURE.
2. ASSE 1017, SEE DISCHARGE AT 120 °F.
3. ASSE 1070, SEE DISCHARGE AT 110°F.
4. W/ 50' OF 3/8" HOSE.
5. 15 GPM @ 5 PSI LOSS.
6. PROVIDE 1/2" DIRT LEG WITH BALL VALVE.
7. COORDINATE WALL & CEILING INSTALLATION CONNECTION & LOCATION.

2

PLUMBING FIXTURE CONNECTION SCHEDULE

PLAN CODE	FIXTURE	PIPE SIZE (INCHES, MINIMUM)							REMARKS
		WASTE		VENT	COLD WATER		HOT WATER		
		TRAP & ARM	VERT. DRAIN	(MIN.)	SUPPLY (MIN.)	CONNECTION (ACTUAL)	SUPPLY (MIN.)	CONNECTION (ACTUAL)	
WC	WATER CLOSET	INT.	4"	2"	1/2"	1/2"	-	-	
L	LAVATORY	1-1/2"	2"	1-1/2"	1/2"	3/8"	1/2"	3/8"	
S/ LS	SINK/ LAUNDRY SINK	1-1/2"	2"	1-1/2"	1/2"	1/2"	1/2"	1/2"	
SH	SHOWER	2"	2"	1-1/2"	1/2"	1/2"	1/2"	1/2"	
EWC	ELEC. WATER COOLER	1-1/2"	2"	1-1/2"	1/2"	3/8"	-	-	
WB	WASHER BOX	2"	2"	1-1/2"	1/2"	1/2"	1/2"	1/2"	
IMB	ICE MAKER BOX	-	-	-	1/2"	1/2"	-	-	
WH/HB	WALL HYDRANT	-	-	-	3/4"	3/4"	-	-	
ES/EEW	EMERGENCY SHOWER / EYEWASH	-	-	-	1-1/4"	-	1-1/4"	-	TEPID WATER
MSB	MOP SERVICE BASIN	3"	3"	1-1/2"	1/2"	1/2"	1/2"	1/2"	

10/17/2019 3:10:54 PM

SEH

Owner
City of Greeley
970.350.9777

Architect/ Civil Engineer/ Structural
Short Elliott Hendrickson, Inc.
2000 South Colorado Boulevard
Tower One, Suite 6000
Denver, Colorado 80222
720.540.6800

Landscape Architect
DHM Design
900 South Broadway
Denver, Colorado 80209
303.892.5566

Mechanical Engineer
The Ballard Group, Inc
2525 South Wadsworth Blvd, Suite 200
Lakewood, CO 80227
303.988.4514

Electrical Engineer
CMO Consulting Eng
11646 Sun Bear Trail
Golden, CO 80403
303.875.4037

The Ballard Group, Inc.
Mechanical Consulting Engineers
2525 S. Wadsworth Blvd, Suite 200
Lakewood, CO 80227
(303) 988-4514

City of Greeley
GREELEY FIRE STATION #2
2301 Reservoir Rd, Greeley, CO 80634

City of Greeley Colorado

This drawing is an instrument of service and shall remain the property of Short Elliott Hendrickson, Inc. (SEH). This drawing, concepts and ideas contained herein shall not be used, reproduced, revised, or retained without the express written approval of SEH.

Submission or distribution of this drawing to meet official or regulatory requirements or for purposes in connection with the project is not be construed as publication in derogation of any of the rights of SEH.

COPYRIGHT © 2019 Short Elliott Hendrickson, Inc. All Rights Reserved

SEH Project	150268
Checked By	TRH
Drawn By	JDR

Project Status	Issue Date
30 % DESIGN	6/26/2019
75% DESIGN	8/29/2019
100% DESIGN	10/18/2019

Revision Issue

Rev. #	Description	Date
2	ADDENDUM 2	10/18/2019

PLUMBING SCHEDULES

P
600

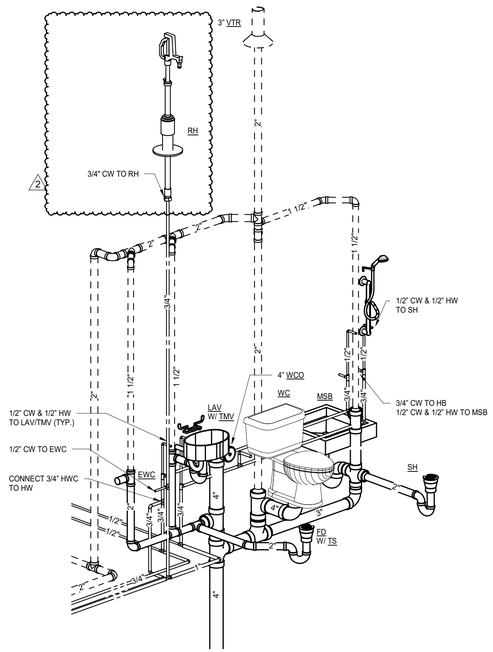

5 P 700 PLUMBING ISOMETRIC
SCALE: NONE

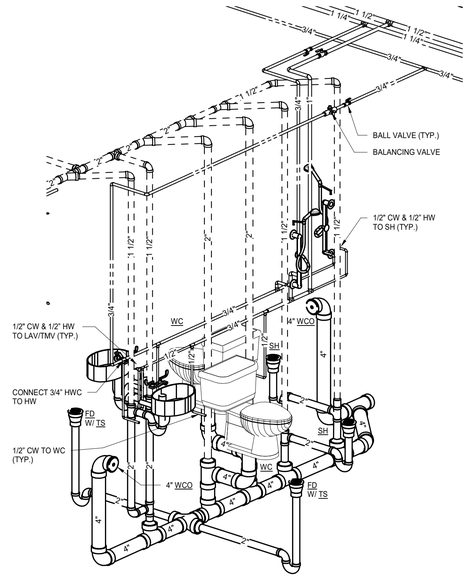

3 P 700 PLUMBING ISOMETRIC
SCALE: NONE

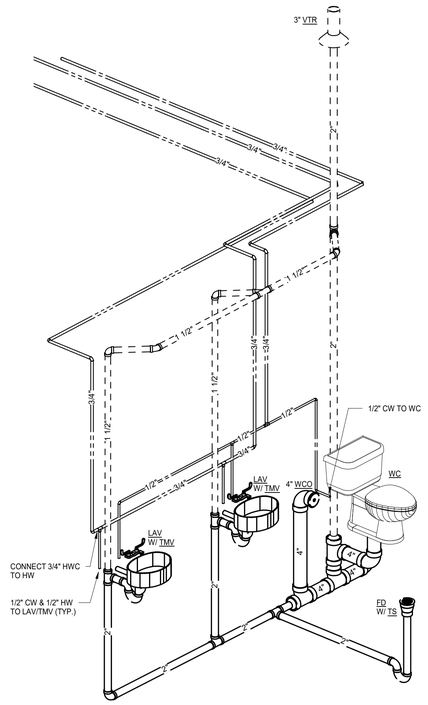

1 P 700 PLUMBING ISOMETRIC
SCALE: NONE

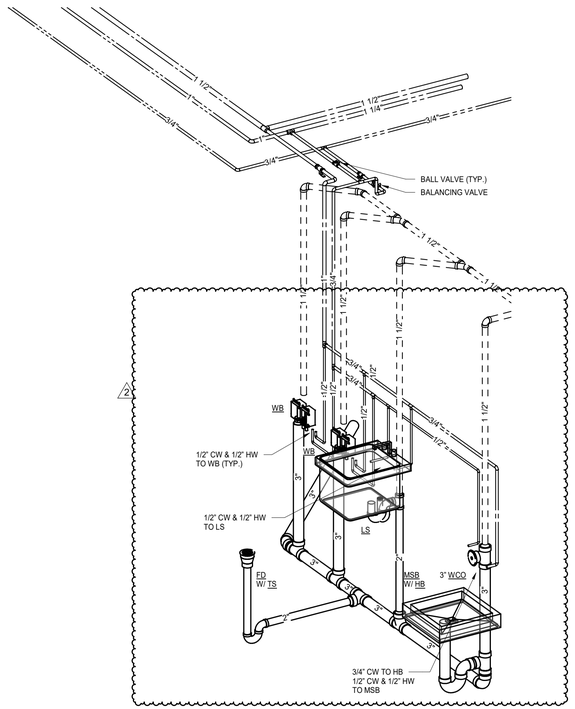

6 P 700 PLUMBING ISOMETRIC
SCALE: NONE

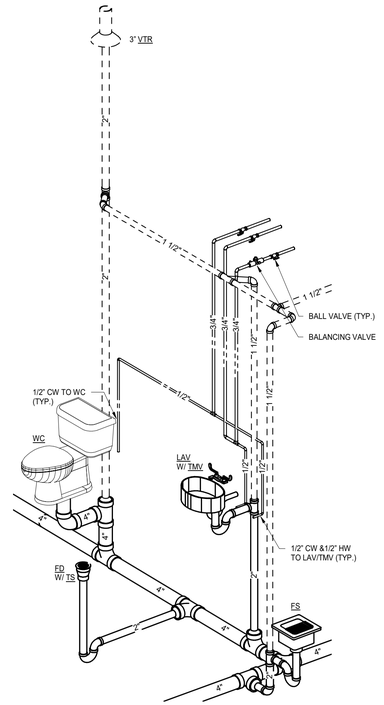

4 P 700 PLUMBING ISOMETRIC
SCALE: NONE

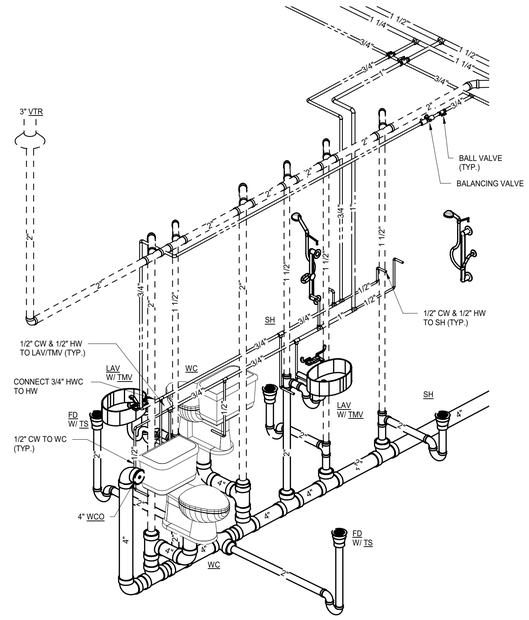

2 P 700 PLUMBING ISOMETRIC
SCALE: NONE

10/17/2019 3:11:00 PM

SEH

COLORADO LICENSED PROFESSIONAL ENGINEER
JOHN J. VERTRAAT
CO 8020
10-18-19

Owner
City of Greeley

970.350.9777

Architect/ Civil Engineer/ Structural
Short Elliott Hendrickson, Inc.
2000 South Colorado Boulevard
Tower One, Suite 6000
Denver, Colorado 80222
720.540.6800

Landscape Architect
DHM Design
900 South Broadway
Denver, Colorado 80209
303.892.5566

Mechanical Engineer
The Ballard Group, Inc
2525 South Wadsworth Blvd, Suite 200
Lakewood, CO 80227
303.988.4514

Electrical Engineer
CMO Consulting Eng
11646 Sun Bear Trail
Golden, CO 80403
303.875.4037

The Ballard Group, Inc.
Mechanical Consulting Engineers
2525 S. Wadsworth Blvd, Suite 200
Lakewood, CO 80227
(303) 988-4514

City of Greeley
GREELEY FIRE STATION #2
2301 Reservoir Rd, Greeley, CO 80634

City of Greeley Colorado

This drawing is an instrument of service and shall remain the property of Short Elliott Hendrickson, Inc. (SEH). This drawing, concepts and ideas contained herein shall not be used, reproduced, revised, or retained without the express written approval of SEH.

Submission or distribution of this drawing to meet official or regulatory requirements or for purposes in connection with the project is not be construed as publication in derogation of any of the rights of SEH.

COPYRIGHT © 2019
Short Elliott Hendrickson, Inc.
All Rights Reserved

SEH Project	150268
Checked By	TRH
Drawn By	JDR

Project Status	Issue Date
30 % DESIGN	6/26/2019
75% DESIGN	8/29/2019
100% DESIGN	10/18/2019

Revision Issue

Rev. #	Description	Date
2	ADDENDUM 2	10/18/2019

PLUMBING ISOMETRICS

P
700