GENERAL STRUCTURAL NOTES:

1. These drawings are for the **Greeley Fire Station #2** and no other use is authorized.
2. These notes do not replace the specifications but are to be read in conjunction with them. Any discrepancies or conflicts between the two shall be brought to the attention of the Structrual Engineer of Record (SER) for resolution.

GOVERNING BUILDING CODE:

1. 2015 International Building Code (IBC) as amended by the City of Greeley Building Code
2. American Concrete Institute (ACI) ACI 318-14 – Building Code Requirements for Structural Concrete, 2014
3. American Concrete Institute (ACI) ACI 530 / TMS 402 / ASCE 5 - Building Code Requirements for Masonry Structures, 2013
4. American Institute Of Steel Construction (AISC) Steel Construction Manual, 14TH Edition
5. American Society Of Civil Engineers (ASCE) Minimum Loads For Buildings And Other Structures 7-10

DESIGN LOADS PER ASCE 7-10:

Risk Category **IV**

| | |
|---|---|
| 1. Live Load: | |
| A. Roof, $L_r$ | 20 psf (Reducible) / 300 lbs concentrated |
| B. Ground Floor | 100 psf |
| C. Floor (Assembly) | 50 psf |
| | 100 psf / 2000 concentrated |
| D. Exercise Room: | 100 psf |
| E. Stairways | 100 psf |
| F. Engine Bay: | HL-93 Truck |
| 2. Snow Loads: | |
| A. Ground Snow Load, $P_g$ | 30 psf |
| B. Flat Roof Snow Load, $P_f$ | 25.2 psf |
| C. Importance Factor, $I_s$ | 1.2 |
| D. Snow Exposure Factor, $C_e$ | 1.0 |
| E. Thermal Factor, $C_t$ | 1.0 |
| F. Rain Loads: | N/A |
| 3. Wind Loads: | |
| A. Ultimate Design Wind Speed (3 sec gust), $V_{ult}$ | 115 mph |
| B. Nominal Design Wind Speed (3 sec gust), $V_{asd}$ | 90 mph |
| C. Wind Exposure | C |
| D. Structure Is: | Enclosed |
| E. Internal Press Coefficient | +/-0.18 |
| F. Manufacturers of items to be installed outdoors (tanks, antennae, etc.) shall provide wind loading calculations signed and sealed by an engineer licensed in the state of the project. | |
| G. See Bar Joist sections of these Notes for specific uplift requirements. | |
| 4. Seismic Loads: | |
| A. Seismic Importance Factor, $I_e$ | 1.50 |
| B. Mapped Spectral Response Acceleration, 0.2 Sec, $S_s$ | 0.156 g |
| C. Mapped Spectral Response Acceleration, 1.0 Sec, $S_1$ | 0.054 g |
| D. Site Class | D |
| E. Site Amplification Factor, 0.2 Sec, $F_a$ | 1.6 |
| F. Site Amplification Factor, 1.0 Sec, $F_v$ | 2.4 |
| G. Design Spectral Response, 0.2 Sec, $S_{DS}$ | 0.166 g |
| H. Design Spectral Response, 1.0 Sec, $S_{D1}$ | 0.086 g |
| I. Seismic Design Category | C |
| J. Basic Seismic Force Resistive System(s) | |
| Apparatus Bay: | Intermediate Masonry Bearing Walls |
| Administration/ Living | Light Framed Bearing Walls |
| K. Design Base Shear | 75.9 kips |
| L. Seismic Response Coefficient | 0.0713 |
| M. Response Modification Factor(s), R | |
| Apparatus Bay: | 3.5 |
| Administration/ Living | 6.5 |
| N. Analysis Procedure | Equivalent Lateral Force Procedure |
| 5. Soil Criteria: | |
| A. Allowable Bearing Pressure | 2,500 psf |
| B. Frost Depth | 30 in |
| C. Anticipated max differential settlement | 1/2 inch |
| D. Anticipated max total settlement | 1 inch |
| E. Lateral Earth Pressures: | |
| F. On-Site Backfill: | |
| 1. Unit weight | 125 pcf |
| 2. Friction angle ($\phi$) | 26 degrees |
| 3. Active Pressure (drained) | 49 pcf |
| 4. At-rest Pressure (drained) | 70 pcf |
| 5. Passive Pressure (drained) | 280 pcf |
| 6. Friction Coefficient: | 0.33 |

2

DESIGN / CONSTRUCTION CRITERIA:

1. The contractor shall verify dimensions and conditions before construction and notify the Engineer of any discrepancies, inconsistencies, or difficulties affecting the work before proceeding.
2. All material, workmanship, and details shall be in accordance with typical competent construction practices, current manufacturer's recommendations, and all applicable codes and government regulations. Special structural inspection is required as scheduled and per IBC Chapter 17. Owner shall hire and coordinate a special inspection and testing agency.
3. The contractor shall coordinate all disciplines, verifying size and location of all openings, whether shown on structural drawings or not, as called for on process, architectural, mechanical, electrical or other drawings. All conflicts, inconsistencies, or other difficulties affecting structural work shall be called to the Engineer's attention for direction before proceeding.
4. Equipment and structural anchor rod sizes, types, embedment, and patterns shall be verified with the manufacturer or fabricator. All anchor patterns shall be templated to ensure accuracy of placement.
5. The contractor shall supply all necessary temporary bracing, shoring, guying, or other means to avoid excessive stresses and to hold structural elements in place during construction.
6. Job site safety (including excavations) is the sole responsibility of the general contractor & their subcontractors.
7. The Engineer is not responsible for construction means, methods, techniques or practices. Where drawings and details imply this, they are provided to show final construction. If contractor desires to use different means and methods than implied by these drawings, submit similar details for review.
8. Standard or typical structural details are intended to illustrate design concepts and to specify material and required physical dimensions matching or similar to the referenced locations in the drawing set.
9. All architectural, mechanical, and electrical components shall be designed and installed to resist the controlling condition of operational forces or seismic forces in accordance with IBC and these notes. Component seismic attachments shall be bolted, welded, or otherwise positively fastened without consideration of frictional resistance due to gravity. A continuous load path of sufficient strength and stiffness shall be provided between the component and supporting structure. Connections for both orthogonal horizontal directions shall be shall be designed and sealed by the contractor's engineer, currently licensed in the state of Colorado. Component reaction forces shall be submitted to the Engineer for confirmation that supporting structure can withstand reaction forces.
10. There is provision for future vertical expansion in the design.

FOUNDATIONS:

1. CAUTION: Existing underground utilities may exist anywhere on the site. Notify Architect/Engineer and Colorado 811 prior to disturbing any grade or excavation.
2. Structural foundations consist of concrete shallow pad and continuous footings established on material capable of safely supporting an allowable bearing pressure of 2,500 psf as recommended by GROUND Engineering Consultants in report 19-0005 dated March 5, 2019 and Addendum No. 1 dated April 24, 2019. The structural engineer is not responsible for the accuracy or content of the subsurface soil conditions described in the specifications, test borings, or geotechnical report. The contractor/owner shall employ a certified geotechnical engineer during construction to test, inspect and verify all assumed soil conditions.
3. Foundation walls shall be adequately braced during backfilling and compaction to prevent movement or structural damage. Bracing shall remain in place until permanent bracing is in place and until concrete achieves sufficient strength to resist imposed loads.
4. When placing compacted fill adjacent to foundation walls and piers, place backfill at equal rates on both sides to prevent overturning or structural damage.
5. Contractor shall provide for dewatering at excavations from either surface water or seepage.
6. Moisture content in soils beneath building locations should not be allowed to change after footing excavations and after grading for slabs on grade are completed. If subgrade materials become desiccated or softened by water or other conditions, remove and replace with engineered fill as recommended by the geotechnical engineer. Do not place concrete on frozen ground, nor allow ground beneath foundations to freeze. All foundation work shall be placed on substrate approved and tested by geotechnical engineer of record.
7. Do not place backfill on frozen subgrade. Do not place frozen backfill.
8. Grading: where not specifically shown on the plans, it is intended that all excavated and backfilled areas shall be graded to slope away from buildings and other structures.

10/18/2019 9:55:07 AM

CONCRETE:

1. All concrete except exterior flat work and residential strip footings shall develop minimum ultimate compressive design strength of 4,500 psi in 28 days. Concrete used in walls and footings shall have a maximum w/c (water/ cement + pozzolan) ratio of 0.45, and a maximum of 4 inches of slump before addition of admixtures. Concrete used in foundation walls shall be air entrained 6% +/- 1%. Concrete used in slab on grade structural slabs shall have a maximum w/c ratio of 0.45, and a maximum of 4 inches of slump before addition of admixtures. All concrete shall be air entrained 6% +/- 1%.
2. Concrete used in interior slabs that are to be trowel finished shall not be air entrained.
3. All concrete is normal weight unless specifically noted otherwise. Cement for foundation walls, slabs, and footings shall be Portland Cement Type I or Type I/II conforming to ASTM C150.
4. The minimum mix requirements may have water-reducing admixtures conforming to ASTM C494 added to the mix at manufacturer's dosage rates for improved workability. No chloride containing admixtures will be allowed. Do not add water to concrete at the jobsite without written approval of the Engineer.
5. The contractor shall be responsible for the design of form work to comply with the dimensions indicated on the plans, maintaining proper alignment during concrete pouring operations. Special care shall be taken with formwork for self-consolidating concrete.
6. The contractor shall adjust mix design as required for aggregate expansions (including use of low-alkali cement, lithium admixtures, or aggregates from another source) as required to limit expansion as measured by current test to less than 0.1 percent.
7. Measured from the time water and cement are batched together, no more than 90 minutes shall elapse until concrete is placed. This time shall be reduced by one minute for every degree that concrete temperature exceeds 75 degrees Fahrenheit.
8. When air temperature is above 85 degrees, provide mist, shading, windscreens and other protection as required for 12 hours after placing.
9. Wet cure (poly and burlap or proprietary blankets kept moist daily) for a minimum of 7 days; footings may be buried after 24 hours. Add one day of cure for flyash in excess of 15 percent or GGBFS in excess of 10 percent of cementitious, and two days for flyash in excess of 30 percent. Contractor is responsible for staining caused by burlap in visible areas. Spray-on curing compounds shall not be used as a substitute for wet curing without written permission of the SER.
10. Protect concrete in accordance with ACI 305 and ACI 306 for hot weather concreting and cold weather concreting respectively. In cold weather, heat is required if outside temperature falls below 30 degrees any time during first three days. Reinforcing shall be 40 degrees or warmer at time of concrete placement. Concrete temperature shall be recorded every morning and shall be kept above 40 degrees in all locations for 7 days. Concrete shall not be exposed to combustion products (use electric heat, ducted heater or ground thaw). Keep protection in place minimum 24 hours after cessation of heating to provide gradual cool-down.
11. Concrete being placed shall be protected from rain. If rain falls on concrete before it has set, or within 3 hours of placement in any event, contractor shall bear cost of testing to prove concrete is unaffected, and shall remove and replace affected concrete to the satisfaction of the Engineer.
12. Cementitious grout shall be non-shrink and non-metallic grout. Place according to manufacturer's recommendations and trim neatly where visible.
13. Coordinate with other trades for sleeves, conduit, electrical grounding wires, inserts, underground utilities, and other items to be embedded into concrete and verify that they are properly installed and supported before casting concrete. Diameter of conduit and pipe running within slab or wall shall not exceed 1/6 the slab or wall thickness and shall be placed in the center of the member. Holes through slab or wall shall leave minimum 1 inch clear to reinforcing; shift reinforcing as required. Placement of such items shall be coordinated with reinforcing placement where they would otherwise displace each other. For instance, in areas with a single mat of reinforcing, east-west conduit should be placed with east-west reinforcing and north-south conduit is placed with north-south reinforcing.
14. Conduit, piping, and other utilities placed in concrete slab shall be spaced at minimum 3 diameters on center.
15. No uncoated aluminum items shall be embedded in any concrete. All aluminum surfaces in direct contact with concrete shall receive one 8-12 mil dry film thickness bitumastic.
16. Unless shown on drawings, concrete shall be placed without construction joints except where specifically shown on shop drawings approved by the Engineer. The contractor shall submit shop drawings showing additional or alternate construction joint locations to the Engineer for approval.
17. Bevel all exposed corners of concrete 3/4"x3/4".
18. Verify size and location of all equipment bases / housekeeping pads.
19. Concrete floors: all cast-in-place concrete floors on grade shall be provided with a min. 1/8" per FT slope to floor drains unless noted otherwise. All interior slabs on grade shall be placed over 15 MIL vapor retarder meeting ASTM E1745 class A, with joints welded or lapped and sealed according to manufacturer's recommendations. Vapor retarder shall permit less than 0.01 perm after conditioning. All damage and penetrations shall be sealed according to manufacturer's recommendations.
20. If concrete contains more than 2 percent entrained air, delay start of finishing to preclude weakened air-rich plane just below surface.
21. Concrete floor on composite metal deck shall be reinforced with WWF 6x6 – W2.1 x W2.1 unless noted otherwise in the drawings. WWF shall be supplied in flat sheets, not rolls. Alternatively, macro-synthetic fibers conforming to the requirements of ANSI/SDI-C-2011 are permitted at the manufacturer's recommended dosage, but not less than 4 pounds per cubic yard. Fibers shall be BASF Masterfiber MAC Matrix or approved equal. In addition, place bars in top portion of slab over beams as noted in the drawings.
22. An independent testing agency shall cast 4 six inch test cylinders or an equivalent number of four inch cylinders for each 75 cubic yards of each concrete mix placed or for each day's operation, whichever is the lesser amount. The testing agency shall cast, cure, and test the specimens in accordance with ASTM C31 and ASTM C39. Air, temperature, and slump shall be tested at minimum for the first truck and every third truck thereafter (1st, 4th, 7th, etc.) Or when a change in properties is noticed, at the final location (test after pump, not at truck).

REINFORCING STEEL:

1. All concrete is reinforced concrete unless specifically called out as unreinforced. Reinforce all concrete not otherwise shown with same steel as in similar sections or areas. Any details not shown shall be detailed per the following standards and codes:
   - ACI 315 "Details and Detailing of Concrete Reinforcing"
   - ACI 318 "Building Dode Requirements for Structural Concrete"
   - MSP2 "CRSI Manual of Standard Practice"
   - AWS D1.4 "Structural Welding Code - Reinforcing Steel"
   - WRI "Welded Wire Fabric Manual of Standard Practice"
2. All reinforcing steel shall conform to the requirements of ASTM A615 or A706 grade 60 steel. Reinforcing to be welded shall only be welded to structural steel, not other reinforcing, unless specifically noted on the drawings, and shall be A706. Welded plain wire fabric shall be supplied in sheets, not rolls, and conform to the requirements of ASTM A185.
3. Clear minimum cover of concrete over reinforcing steel shall be as follows unless specifically noted otherwise:
   - Concrete placed against earth 3"
   - Top mat of floor slabs 1 ½"
   - All other concrete 2"
4. All reinforcing shall be tied to crossing reinforcing on at least every other bar, and sufficiently to resist displacement from workers and placement of concrete.
5. All footing dowels shall be accurately positioned and wired in place before casting footing concrete. Where not noted, provide and install dowels of same size and spacing as vertical reinforcement in all columns and walls. Position all anchor bolts with templates.
6. Bar lap lengths in concrete and 90 degree end hooks shall be in accordance with the typical lap splice schedule unless noted otherwise.
7. Bars marked continuous, corner bars, and all vertical steel shall be lapped in accordance with table above at splices and embedments, unless shown otherwise. Splice top bars near midspan and splice bottom bars over supports, unless noted otherwise.
8. Bar support accessories shall be as specified in latest edition of the aci detailing handbook and the Concrete Reinforcing Steel Institute Design Handbook. Maximum accessory spacing shall be 4'-0" on center, and all accessories on exposed surfaces shall have plastic coated ends. WWF shall be supported by continuous bolsters or bars on chairs sufficiently close to prevent sheets from sagging appreciably during concrete placement. Support rebar used at contractor's option shall be extra bars supplied by contractor, not taken from design reinforcing.
9. Where potentially exposed to de-icing salts; stoop, apron, sidewalk, and floor reinforcing shall be epoxy coated.

STRUCTURAL METALS:

1. All structural steel shall be as follows:
   - Wide Flange beams ASTM A992, Grade 50 (Fy = 50 ksi)
   - Miscellaneous steel ASTM A992, or A36 (Fy = 36 ksi)
   - Rectangular Steel Tubes (HSS) ASTM A500, Grade C (Fy = 50 ksi).
   - Pipe ASTM A53, grade B (Fy = 35 ksi)
   - Other shapes ASTM A36 (Fy = 36 ksi)
2. All steel shall receive a primer coat unless galvanized, refer to specification manual.
   A. Splicing or modification of members in the field is prohibited without prior written approval of the Engineer.
   B. All primary member bolted connections shall be two bolt minimum.
   C. Fabrication and erection shall be in accordance with the latest edition of the AISC Manual Of Steel Construction, except as follows:
      - To paragraph 3.1, add 'The project architectural drawings are a part of the structural steel design drawings by reference and must be used concurrently with the structural steel design drawings for any information not shown on the structural steel design drawings."
      - Delete paragraph 3.2 and insert the following: "architectural, process, electrical and mechanical plans shall be used as a supplement to the structural steel design drawings to define detail configurations and construction information."
      - Paragraph 3.3 modify the last sentence to read, "in case of discrepancies between the structural steel plans and plans of other disciplines, such discrepancies shall be called to the Engineer's attention for resolution."
3. All steel welding shall be performed by a certified welder using e70 electrodes in accordance with the requirements of the AWS D1.1 "structural welding code" and visually inspected. Full-pen welds shall also be inspected by NDT methods such as ultrasonic, mag particle, or dye pen.
4. All field welded connections shall be chipped, ground where required, wire brush cleaned and painted to match the paint system.
5. All bolts not otherwise specified shall be 3/4" diameter high strength (ASTM A325-N). All bolts shall be snug tightened. All connections must be two bolt minimum. All copes shall be made with a 1 inch minimum radius.
6. All beam connections shall be designed per the AISC Manual of Steel Construction "Framed Beam Connections" for the indicated reactions or at least 0.60 x beam total shear capacity shown in the allowable uniform load tables, whichever is greater. All connections must be two bolt minimum. All copes shall be made with a 1 inch minimum radius.
7. All base plate anchor rods shall be 3/4" diameter ASTM F1554 Grade 36 unless noted otherwise. Where headed rods are noted or specified, bent rods shall not be furnished; rods may be headed or nutted, with the nut tack welded at the bottom end of the anchor or double nutted.

OPEN WEB STEEL JOISTS AND JOIST GIRDERS:

1. Pre-engineered open web steel joists and joist girders shall be in compliance with and designed in accordance with the latest edition of the following requirements and recommendations:
   - AISC, American Institute of Steel Construction specification for design, fabrication and erection of structural steel for buildings
   - SJI, Steel Joist Institute technical digests and design standards
   - AISI, American Iron and Steel Institute specification for the design of cold-formed steel structural members
2. Design is based on products of New Millennium Building Systems, and any substitutions shall meet that standard.
3. Steel joists and joist girders shall be shop primed / receive an epoxy paint system.
4. Steel joist and joist girder manufacturer shall supply all miscellaneous accessories such as anchors and bridging to complete the steel joist installation.
5. All suspended concentrated loads shall be applied to panel points where possible. If suspended concentrated loads are applied between panel points, additional members shall be added to carry the loads back to panel point locations.
6. Steel joist and joist girder manufacturer shall provide shop drawings for the Engineer's review including: steel joist and joist girder member sizes, spacing, bracing, and all connections.
7. Steel joists and joist girders shall be designed for a net uplift wind force of 10 PSF, unless noted otherwise. All joists shall have X bracing installed at the first bottom chord panel point, each end.
8. The handling and erection of steel joists and joist girders shall be in accordance with the SJI Technical Digest #9 "Handling and Erection of Steel Joists and Joist Girders."
9. All K-series joists bearing on 8 inch masonry walls shall have 3/8"x 5 1/2"x 8" bearing plates with two (2) ½" diameter x 4" studs set in bond beams. Bearing plates shall be located not more than 1" from the face of the wall on the bearing side. For thicker walls bearing joists from each direction, increase width of plate to fit block. Joists shall bear 4" minimum on bearing plates and be welded to bearing plates with 2" of 3/16" fillet weld each side (minimum), unless joists oppose each other, in which case minimum bearing length shall be 2 1/2" each. LH-series joists shall have 1/2" x8"x12" bearing plates w/ (2) ½" dia. X 4" studs and 4" of 3/16" fillet weld each side (min).
10. All steel joists shall have horizontal bar or angle bridging per Steel Joist Institute specifications. Provide rigid X-bridging in addition to and matching horizontal bridging where joists are discontinuous unless horizontal bridging is anchored to wall top and bottom. Joist sweep allowance shall comply with AISC standard practice.
11. All steel joists shall have a midspan camber approximately equal to that recommended by the Steel Joist Institute specifications.
12. Support mechanical equipment with 4"x4"x5/16" angles laid between joists at panel points, with 4"x4x"5/16" angles (length equals mechanical unit dimension plus distance each end to next panel point) laid parallel to joists and bearing on transverse angles at joist panel points. Penetrations through steel deck shall be reinforced according to metal deck notes.
13. General contractor shall verify mechanical loads with the mechanical contractor and provide to joist supplier and SER before design.
14. If Special joists (with non-uniform loads) are defined in the drawings, joist manufacturer shall submit design calculations sealed by a Professional Engineer licensed in the state of the project for review by the SER. Calculations shall explicitly show design loads used, and their locations.

METAL DECK

1. Metal deck shall span a minimum of two continuous spans. Deck design is based on products of New Millennium Building Systems, and any substitutions shall meet that standard. Where not explicitly noted, roof deck is wide rib.
2. Openings through deck which cut one flute need not be reinforced. Openings which cut two flutes shall be reinforced with a hot rolled equal-leg angle the size of the deck depth, minimum 1/8 inch thick, extending 12 inches past the opening, on each side of the opening, fastened with minimum 2 - #10 screws each side of opening. Openings which cut more than two flutes shall be framed to surrounding supports with frames as detailed in the drawings.
3. Manufacturer shall be a member of the Steel Deck Institute (SDI). Detail, manufacture, and install deck and accessories in accordance with SDI and OSHA.
4. Welding and welder qualifications shall be in accordance with AWS D1.3.
5. Deck shall be fastened to underlying framing with 5/8 inch diameter puddle welds at spacing as indicated on the drawings, unless headed studs are to be applied. Contractor may submit shot pins (PAF) for approval as a substitute for puddle welds. Side lap edges shall be joined with minimum of one #10 screw in each deck span, unless more screws are indicated in the drawings.
6. Where spray-on fireproofing is required, the general contractor shall verify that the deck finish is compatible with fireproofing. Coordinate with architect.
7. All roof opening dimensions and locations shown on the plans shall be verified by the contractor and roof manufacturer.
8. Where not noted on the drawings, Contractor shall supply pour stop as required for composite deck. Where pour stop is required to carry other elements or resist loads after construction, refer to details in drawings.

LIGHT GAUGE METAL FRAMING

1. The design and connection detailing of all light gauge material including, but not limited to exterior studs, bearing studs, headers, jambs, joists, rafters and anchorage shall be by the light gauge supplier. The design for systems other than bearing framing shall meet the following criteria.
2. Studs in exterior walls shall be minimum 600 S162-54 (6"-16 gauge) studs at 16" OC.
3. Studs shall be cold rolled steel, galvanized, C shape with minimum 1 5/8" flange and minimum 1/2" return. They are to be punched for utility access and galvanized to G60 coating for interior walls and G90 for exterior walls per ASTM A525.
4. At all openings in exterior and bearing walls, provide a minimum two studs full wall height each side of opening and a minimum one additional cripple stud for each side for lintel bearing.
5. Anchor bottom track to concrete or masonry with minimum 5/32"x1 1/4" power driven fasteners at 16" OC at exterior walls and load bearing interior walls or shear walls.
6. Top and bottom tracks shall be cold rolled or break formed steel, galvanized U shaped and minimum 16 gauge and as noted on the drawings.
7. Light gauge metal framing fasteners shall be a minimum #10 self-drilling sheet metal screws, 16 threads per inch, with low profile head. Provide a minimum of two screws per connection unless noted otherwise.
8. Fasten light gage framing to wood with minimum #10 x1 7/8" bugle head wood screws. Pre-drill holes in metal studs. Provide a minimum of two screws per connection unless noted otherwise.
9. All framing components shall be squarely cut for attachment to perpendicular members. Stud ends must seat tightly into tracks for all bearing applications.
10. At all wall elements, provide 1 1/2" - 16 gauge horizontal channel bridging to prevent stud rotation. For all axially loaded walls, space bridging at 4'-0" OC. For all non-load bearing exterior wall, space at 5'-0" OC.
    - Wall stud deflection criteria:
      1. For wall studs providing lateral support to cementitious stucco, provide L/600.
      2. For wall studs providing lateral support to other materials, provide L/360.
    - Joist and rafter deflection criteria:
      1. Live load deflection is L/360
      2. Total load deflection is L/240.
11. An additional joist shall be provided under parallel non-load bearing partition walls.
12. The light gauge supplier shall submit certified shop drawings and design calculations prepared by a qualified Professional Engineer licensed in the state where the project is located. See project specification manual for additional submittal requirements.
13. All light gauge designations are in accordance with the steel stud manufacturers association (SSMA):
    - 12 Gauge 97 Mils (0.097")
    - 14 Gauge 68 Mils
    - 16 Gauge 54 Mils
    - 18 Gauge 43 Mils
    - 20 Gauge 33 Mils
    - 22 Gauge 27 Mils
14. Refer to architectural drawings and specification for size, minimum gage, extent and location of interior non-bearing light gage framing not shown on the structural drawings. Interior light gauge framing is to be designed for a minimum of 5 PSF lateral pressure by the light gauge supplier.
15. Temporary bracing shall be furnished by the light gauge supplier and framing installer and maintained until permanent systems providing lateral stability are in place.
16. Welding shall conform to the current edition of the American Welding Society (AWS) "Structural Welding Code -- Sheet Steel, D1.3." Welders shall be qualified in accordance with AWS D1.3 and shall be experienced in light gauge welding.
17. All light gage material to be welded must be nominal 16 gauge or thicker.
18. Touch up all light gage material at welds with zinc-rich paint.
19. Align load bearing wall studs with floor and roof joists and trusses.
20. Splices in studs, joists and headers are not permitted, unless approved in writing by the structural engineer.
21. Framing components may be pre-assembled into panels prior to erecting. Prefabricated panels shall be square, with components attached in a manner that prevents racking.

CONCRETE BLOCK MASONRY

1. Concrete block noted to have vertical reinforcement shall be two core block. Concrete block used in exterior walls or load bearing walls shall meet the following minimum requirements:
   - Masonry Assembly, $F'_m$: 2500 PSI
   - Concrete Masonry Units: ASTM C90-11A 2800 PSI
   - Mortar, ASTM C-270-10 Type M Or S below grade, Type S above grade
   - GROUT, ASTM C-476-10, $F'_g$ 3000 PSI
2. The contractor shall provide adequate temporary bracing for all masonry walls during construction.
3. Concrete block shall be laid in running bond pattern typical unless noted otherwise. No vertical (head) joint shall be continuous for more than one block height. Lay hollow concrete masonry units with full mortar coverage on horizontal and vertical face shells. Bed webs in mortar in starting course on footings and foundation walls and in all courses of piers, columns and pilasters, and where adjacent to cells or cavities which are to be reinforced or to be filled with concrete or grout.
4. All joints shall be concave tooled joints above and below grade.
5. Masonry walls shall be reinforced with hot dipped galvanized truss horizontal reinforcing (per ASTM a153) with 9 gage side and cross rods. Reinforcing shall be continuous in horizontal joints every other block course (16 inches oc) in walls, every course (8 inches oc) in parapets, with prefabricated corner and tee sections.
6. Unless noted otherwise, concrete block shall be reinforced as follows in 8", 10", and 12" walls:

| Nominal Wall Thickness: | Vert. Reinf. | Horiz. Joint Reinf. | Bond Beam Reinf. |
|---|---|---|---|
| 8" | 1-#5 @ 40" Centered | 9 ga E.F. @ 16" | 2-#4 @ 48" o.c. |
| 10" | 2-#4 @ 48" Centered | 9 ga E.F. @ 16" | 2-#4 @ 48" o.c. |
| 12" | 2-#4 @ 48" Centered | 9 ga E.F. @ 16" | 2-#4 @ 48" o.c. |

2

7. Vertical reinforcing shall be as shown in table above at each corner, at each door and window jamb, each side of control joints, and in the end void of each length of wall.
8. Lap splices shall be according to typical splice schedule.
9. Provide bond beams at:
   - Top and bottom of walls
   - Bottom edge of opening (extend min. 2'-0" past opening)
   - Roof lines
   - Top of parapets
   - Bond beams shall be continuous U.N.O. and shall have standard laps or hooked development reinforcing bars at wall corners and intersections (see sheet S510)
10. Provide bar or bars of same size as wall reinforcing at each corner, at each door, window, and opening jamb, each side of control joints and in the end void of each length of wall.
11. Continuous horizontal bars shall be included per section or detail in bond beam or optional running bond beam where noted. Where not detailed, use (2) #5 continuous. Where bond beams are continuous at corners of walls, supply corner bars matching size of horizontal bars. All bond beam reinforcing shall have standard laps or hooked development reinforcing bars at wall corners and intersections.
12. Grouting and reinforcing: all masonry, grouting, and reinforcing work shall be performed by mason craft workers who have successfully completed the international masonry institute training course for grouting and reinforced masonry construction, or equal.
13. Masonry block cells with vertical reinforcing and bond beams with horizontal reinforcing shall be grouted solid with a cement grout mix, $F'_g$ = 3000 psi and maximum w/c ratio of 0.60. Mortar is not acceptable. Provide a cleanout hole at the base of all grouted cells. Account for fly ash in grout during winter construction by protecting and heating as required to assure set and strength gain.
14. Non-load bearing concrete block walls shall be isolated from adjacent structural elements with vertical 1/2 inch control joints and at the top of the wall with minimum 1/2 inch air space or compressible material and support per details on the drawings.
15. Unless otherwise covered on architectural plans or specifications, vertical control joints in masonry construction shall be 3/8" wide, full height of wall. Joints shall be spaced at a maximum of 16' -0" on center and coordinated with the architect/engineer. Install control joints in locations as required and as directed by engineer/architect.
16. All horizontal joint reinforcing shall be discontinuous at control joints in masonry. All bond beam horizontal reinforcing shall be continuous through control joints.
17. Lintels over all openings in walls not otherwise noted, of 4'-0" span or less, shall be one 6" x 3-1/2" x 5/16" angle for each 4" of masonry (2 angles for 12" CMU); or an 8 inch deep bond beam with 2 - #5. All exterior steel lintels to be hot-dip galvanized. Bear minimum 8 inches on jambs grouted and reinforced full height.
18. Walls shall be anchored at bottom by hooked dowels matching wall vertical reinforcing (unless noted otherwise) set on footing bottom mat. Non-bearing walls shall be anchored at top by bracing angles per details on drawings.
19. Bond beam lintels shall be standard horse collar type (U shaped) block. Continuity bond beams may be, and upper courses of multi-course bond beams shall be, flow through block.

POST INSTALLED ANCHOR RODS AND DOWELS:

1. Unless noted otherwise, anchors and reinforcing dowels installed in concrete or concrete masonry shall be as noted below. Anchors not shown or noted on the drawings, those required by the contractor solely for his means and methods, or those required by mechanical/electrical and carrying less than 100 pounds of non-safety-related items, do not require special inspection.
2. Approved manufacturers are: HILTI, ITW/Redhead, Simpson, and Powers/Rawl. Submit product data and current ICC-ES report or IAPMO report showing product is compliant with project code requirements for review. Contractor shall arrange for manufacturer's rep to train all installers on the complete installation process. A letter of procedure stating method of drilling, the product for use, the complete installation procedure, manufacturer training date and a list of the personnel trained on anchor installation shall be submitted to the engineer.
3. Permanent anchors exposed to earth, weather, or corrosive environments, and anchors engaging stainless steel or aluminum members, shall be stainless steel type 304 or 316; anchors in contact with chloride de-icer runoff shall be type 316. Otherwise, anchors shall be zinc plated, minimum ASTM A36 material unless ASTM A193 Grade B7 is noted in the drawings, and shall be according to ASTM F1554. Reinforcing dowels shall be of the same material and coating (if any) as the continuing reinforcing.
4. Where expansion anchors are called for, contractor may substitute screw type anchors with self-tapping threads or adhesive anchors of the same size and embedment, subject to review of capacity by the engineer for the product substituted. Where adhesive anchors are called for, other types shall not be substituted. Screw type anchors shall not be re-used on permanent work.
5. Adhesive shall have a current ICC ES Report. Use high viscosity adhesive and placement devices in consultation with the manufacturer for overhead work. Use low temperature formulations for cold weather work. Do not apply significant load to anchors in cold weather until their capacity has been assured.
6. Holes shall be drilled, cleaned, and maintained until installation in accordance with manufacturer's recommendations using standard rotary-impact bits and oil-free compressed air; diamond core bits shall not be used unless specifically approved by the manufacturer. Locate and avoid reinforcing bars and PT tendons. Maintain spacing (minimum 8 inches) and edge/corner distances (minimum 4 inches) as recommended by manufacturer unless specifically noted otherwise in the drawings.
7. Unless noted otherwise, anchors shall be installed to the following embedments:

| | Diameter | CIP Concrete |
|---|---|---|
| Expansion/Screw: | 1/2 inch | 3 1/2 inches |
| | 5/8 inch | 4 inches |
| | 3/4 inch | 5 inches |
| Adhesive: | 1/2 inch | 4 1/2 inches |
| | 5/8 inch | 5 inches |
| | 3/4 inch | 6 inches |

8. Except as noted, all anchors shall have intermittent special structural inspection per the applicable building code and per the current ICC-ES report by one of the following. Load tests shall be to 150 percent of service capacity or 50 percent of ultimate strength, with no appreciable slip or permanent deformation. Anchors which fail this test shall be replaced at no cost to the project. Two failures in a given installation shall result in mandatory load testing at double the rate noted below.
   a. Expansion and Screw Anchors:
      - Witness installation with torque wrench according to manufacturer's recommendations and requirements of ICC-ES report
      - Test all anchors with torque wrench after installation (including load test of 5 percent of installed anchors)
      - Load test of 10 percent of installed anchors by supplier or third party inspector
   b. All adhesive anchor rods and dowels shall have special structural inspection (intermittent except as noted for overhead, upward sloping, and horizontal installation) by one of the following:
      - Witness installation according to manufacturer's recommendations and requirements of ICC-ES report
      - Load test of 10 percent of installed anchors by supplier or third party inspector

SHOP DRAWING REVIEW

1. Short Elliott Hendrickson Inc. (SEH) will review the general contractor's (GC) shop drawings and related submittals (as indicated below) with respect to the ability of the detailed work, when complete, to be a properly functioning integral element of the overall structural system designed by SEH. In general, submittals will not be reviewed for correct quantities or construction considerations. SEH shall review shop drawings and related materials with comments provided that each submission has met the requirements herein. SEH shall return without comment unrequired material or submissions without GC approval stamp
2. Any items requiring submittal of calculation packages shall have calculations submitted prior to or as part of the shop drawing submittal they accompany. Shop drawings submitted prior to submittal of required calculations will be rejected. All calculations shall be sealed and signed by an engineer licensed in the state of the project. The supplier's engineer must provide calculations for all systems and connections that differ from the drawings. Design shall comply with the requirements in these notes, the drawings and the specifications.
3. Prior to submittal of a shop drawing or any related material to SEH, the GC shall:
   - Review each submission for conformance with the means, methods, techniques, sequences and operations of construction and safety precautions and programs incidental thereto, all of which are the sole responsibility of the GC.
   - Review and approve each submission.
   - Stamp each submission as approved.
4. SEH shall assume that no submission comprises a variation from the contract documents unless the GC advises SEH with written documentation. Should SEH require more than ten (10) working days to perform the review, SEH shall so notify the GC. Submittals shall include drawings and related material (if any) as indicated below.
   - Concrete mix designs and material certificates including admixtures and compounds applied to the concrete after placement.
   - Aggregate tests and concrete test history for each mix design, with the submission of concrete mix designs.
   - Reinforcing steel shop drawings including erection drawings and bending details. Bar list will not be reviewed for correct quantities.
   - Elevations of all reinforced concrete masonry walls and all concrete walls with footing steps or other elevation changes, at a scale no smaller than 1/8" = 1'-0" showing all required reinforcing.
   - Grout mix designs (for CMU).
   - Structural steel shop drawings including erection drawings and piece details. Include joist, decking and connector submittals. Include miscellaneous framing specified on drawings.
   - Joist shop drawings for joists carrying non-uniform loads shall include design calculations.
   - Structural steel connection design calculations, where required.
   - Stairs and railing. Details on the drawings for the following items have been designed by the SER: railing systems, connection of railings and stringers to the primary structure. All other items shall be designed by the supplier's engineer to match intent of the construction drawings.
   - Sealed design calculations, standard details, and bridging information for light gage metal framing. Erection plans and details for light gage metal joists and lintels spanning more than 6'-0" shall be submitted. Standard interior non-loadbearing wall framing need not be submitted.
   - Metal deck shop drawings.

2

STRUCTURAL SHEET INDEX


| | |
|---|---|
| S 001 | GENERAL STRUCTURAL NOTES |
| S 002 | GENERAL STRUCTURAL NOTES |
| S 101 | FOUNDATION PLAN |
| S 102 | LOWER ROOF / MEZZANINE PLAN |
| S 103 | UPPER ROOF PLAN |
| S 301 | SECTIONS |
| S 401 | ENLARGED PLANS |
| S 500 | FOUNDATION DETAILS |
| S 501 | FOUNDATION DETAILS |
| S 510 | MASONRY DETAILS |
| S 511 | MASONRY DETAILS |
| S 520 | STEEL DECK DETAILS |
| S 530 | STEEL FRAMING DETAILS |
| S 531 | STEEL FRAMING DETAILS |
| S 532 | STEEL FRAMING DETAILS |
| S 533 | STEEL FRAMING DETAILS |
| S 540 | TYPICAL REINFORCING DETAILS |
| S 550 | SHEAR WALL DETAILS |
| S 560 | STEEL JOIST LOAD DIAGRAM |


SEH®

COLORADO LICENSED
DAVID A. KRELL
10/18/19
41222
PROFESSIONAL ENGINEER


Owner
City of Greeley
10th Street
Greeley, Colorado 80631
970.350.9777

Architect/ Civil Engineer/ Structural
Short Elliott Hendrickson, Inc.
2000 South Colorado Boulevard
Tower One, Suite 6000
Denver, Colorado 80222
720.540.6800

Landscape Architect
DHM Design
900 South Broadway
Denver, Colorado 80209
303.892.5566

Mechanical Engineer
The Ballard Group, Inc
2525 South Wadsworth Blvd, Suite 200
Lakewood, CO 80227
303.988.4514

Electrical Engineer
CMO Consulting Eng
11646 Sun Bear Trail
Golden, CO 80403
303.875.4037


City of Greeley
**Greeley Fire Station #2**
2301 Reservoir Rd, Greeley, CO 80634


This drawing is an instrument of service and shall remain the property of Short Elliott Hendrickson, Inc. (SEH). This drawing, concepts and ideas contained herein shall not be used, reproduced, revised, or retained without the express written approval of SEH.

Submission or distribution of this drawing to meet official or regulatory requirements or for purposes in connection with the project is not be construed as publication in derogation of any of the rights of SEH.

COPYRIGHT © 2019 Short Elliott Hendrickson Inc. All Rights Reserved


| | |
|---|---|
| SEH Project | 150268 |
| Checked By | DK |
| Drawn By | EE/DK |

| Project Status | Issue Date |
|---|---|
| 30% DESIGN | 6/26/2019 |
| 75% DESIGN | 8/29/2019 |
| 100% DESIGN | 10/18/2019 |

Revision Issue

| Rev. # | Description | Date |
|---|---|---|
| 1 | Addendum #1 | 9/18/19 |
| 2 | Addendum #2 | 10/18/19 |

GENERAL STRUCTURAL NOTES

S
001

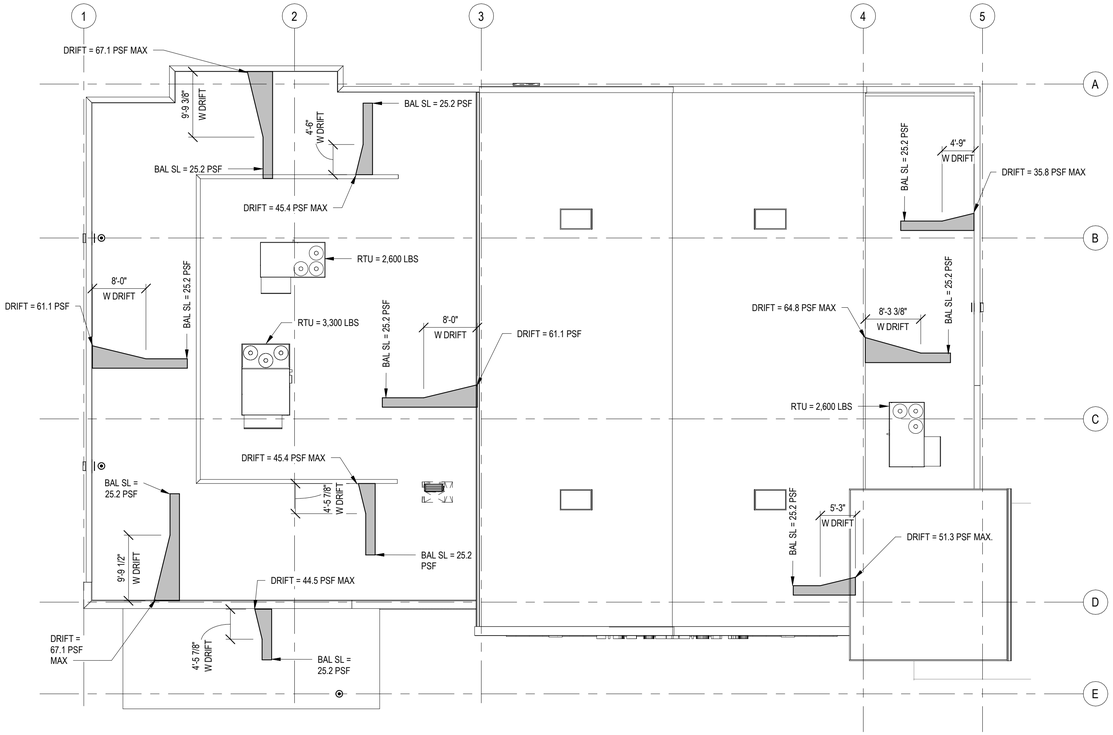


1 SNOW LOAD DIAGRAM

NOT TO SCALE

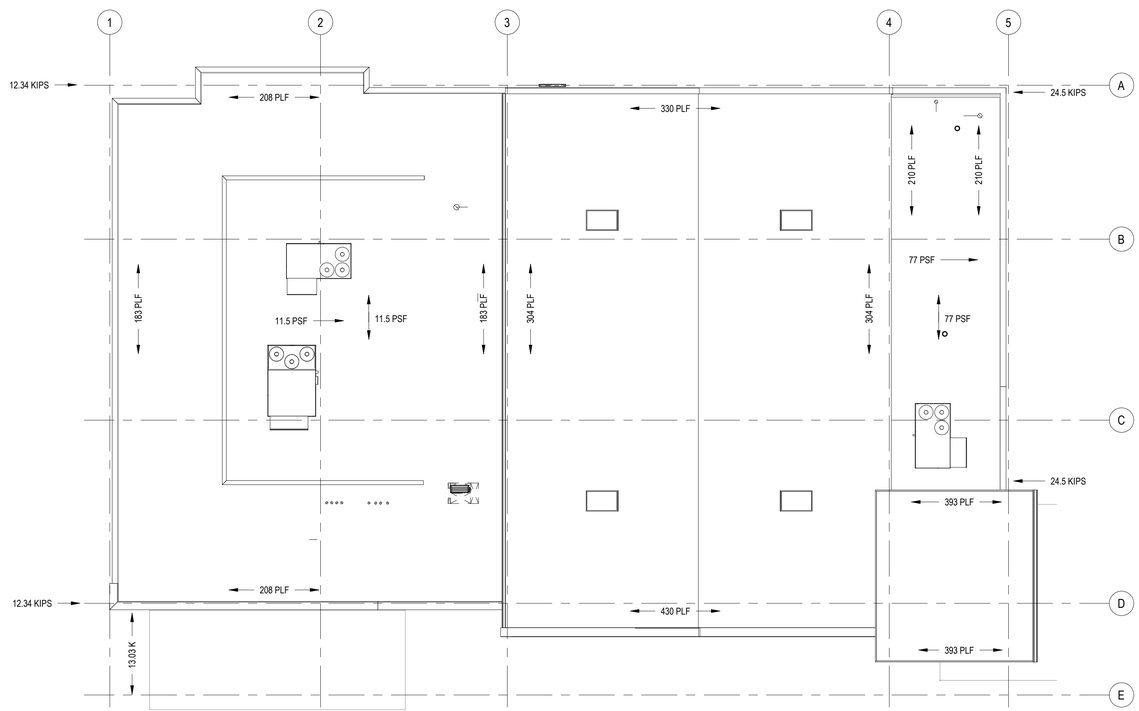


NOTES:
SERVICE LOADS SHOWN ALONG LINES DO NOT INCLUDE ASD FACTORS.
WIND LOAD CONTROLLING.

2 ROOF DIAPHRAGM LOADING DIAGRAM

NOT TO SCALE

10/18/2019 9:55:12 AM

SPECIAL INSPECTIONS

Special inspections stated in the table below shall be performed in accordance with chapter 17 of the International Building Code, as referenced and amended by the City of Greeley Building Code.

**REQUIRED SPECIAL INSPECTIONS**

| DESCRIPTION OF WORK IBC SECTION 1704 | INSPECTION YES | INSPECTION NO | FREQUENCY C* | FREQUENCY P* | TESTING YES | TESTING NO | N/A |
|---|---|---|---|---|---|---|---|
| METAL CONSTRUCTION | | | | | | | |
| WELDING | ● | | | ● | | ● | |
| DETAILS: BRACING, LOCATIONS, ETC. | ● | | | ● | | ● | |
| BOLTING | ● | | | ● | | ● | |
| 2 OPEN-WEB STEEL JOISTS AND JOIST GIRDERS | | | | | | | |
| INSTALLATION OF OPEN-WEB JOISTS AND JOIST GIRDERS: END CONNECTIONS WELDED OR BOLTED | ● | | | ● | | ● | |
| INSTALLATION OF STANDARD BRIDGING | ● | | | ● | | ● | |
| BRIDGING THAT DIFFERS FROM SJI SPECS. | ● | | | ● | | ● | |
| STEEL DECKING | | | | | | | |
| INSTALLATION OF STEEL DECKING: CONNECTIONS WELDED OR MECHANICALLY FASTENED | ● | | | ● | | ● | |
| CONCRETE CONSTRUCTION | | | | | | | |
| INSPECT REINFORCEMENT | ● | | | ● | | ● | |
| INSPECT ANCHORS CAST IN CONCRETE | ● | | | ● | | ● | |
| VERIFY USE OF REQUIRED DESIGN MIX | ● | | | ● | | ● | |
| PRIOR TO CONCRETE PLACEMENT, FABRICATE SPECIMENS FOR STRENGTH TESTS, PERFORM SLUMP AND AIR CONTENT TESTS, AND DETERMINE THE TEMPERATURE OF THE CONCRETE. | ● | | | ● | ● | | |
| INSPECT CONCRETE AND SHOTCRETE PLACEMENT FOR PROPER APPLICATION TECHNIQUES | ● | | | ● | | ● | |
| VERIFY MAINTENANCE OF SPECIFIED CURING TEMPERATURE AND TECHNIQUES | ● | | | ● | | ● | |
| INSPECT FORMWORK FOR SHAPE, LOCATION AND DIMENSIONS OF THE CONCRETE MEMBER BEING FORMED | ● | | | | | | |
| MASONRY CONSTRUCTION | | | | | | | |
| REINFORCEMENT: SIZE AND SPACING | ● | | | | | ● | |
| PRISMS | ● | | | | ● | | |
| DETAILS: GROUTING, LINTELS, ETC. | ● | | | | ● | | |
| DEEP FOUNDATIONS | | | | | | | |
| OBSERVE DRILLING OPERATIONS AND MAINTAIN COMPLETE AND ACCURATE RECORDS FOR EACH ELEMENT | | | | | | | ● |
| VERIFY PLACEMENT LOCATIONS AND PLUMBNESS, CONFIRM ELEMENT DIAMETERS, LENGTHS, EMBEDMENT INTO BEDROCK, AND ADEQUATE END BEARING STRATA CAPACITY. RECORD CONCRETE OR GROUT VOLUMES. | | | | | | | ● |
| GRADING, EXCAVATION, AND FILLING | | | | | | | |
| VERIFY MATERIALS BELOW SHALLOW FOUNDATION ARE ADEQUATE TO ACHIEVE THE DESIGN BEARING CAPACITY | ● | | | ● | | ● | |
| VERIFY EXCAVATIONS ARE EXTENDED TO PROPER DEPTH AND HAVE REACHED PROPER MATERIAL | ● | | | ● | | ● | |
| PERFORM CLASSIFICATION AND TESTING OF COMPACTED FILL MATERIALS | ● | | | ● | | ● | |
| VERIFY USE OF PROPER MATERIALS, DENSITIES, AND LIFT THICKNESSES DURING PLACEMENT AND COMPACTION OF COMPACTED FILL | ● | | | ● | | ● | |
| PRIOR TO PLACEMENT OF COMPACTED FILL, INSPECT SUBGRADE AND VERIFY THAT SITE HAS BEEN PREPARED PROPERLY | ● | | | ● | | ● | |

* C = CONTINUOUS, P = PERIODIC

ABBREVIATIONS:

| | |
|---|---|
| ADDL | ADDITIONAL |
| ADH | ADHESIVE |
| ADJ | ADJUSTABLE |
| AL | ALUMINUM |
| APPROX. | APPROXIMATELY |
| ARCH. | ARCHITECTURE/ARCHITECTURAL PLANS |
| B/O | BOTTOM OF |
| BLDG | BUILDING |
| BOT | BOTTOM |
| BRG | BEARING |
| BTWN | BETWEEN |
| CJ | CONTROL JOINT |
| CL | CENTERLINE |
| CLR | CLEAR COVER |
| CMU | CONCRETE MASONRY UNIT |
| CIP | CAST IN PLACE |
| COL | COLUMN |
| CONC. | CONCRETE |
| CONST. | CONSTRUCTION |
| CONT. | CONTINUOUS |
| CTR | CENTERED |
| DEG. | DEGREE |
| DIA. | DIAMETER |
| DBE | DECK BEARING ELEVATION |
| DWG | DRAWING |
| DWL | DOWEL |
| E | EAST |
| EA | EACH |
| EF | EACH FACE |
| EL. | ELEVATION |
| EXT. | EXTERIOR |
| ENCL | ENCLOSURE |
| EQ.SP. | EQUIALLY SPACED |
| EQUIP. | EQUIPMENT |
| EW | EACH WAY |
| EX. | EXISTING |
| EXP. | EXPANSION |
| F.F. | FRONT FACE |
| FFE | FINISHED FLOOR ELEVATION |
| F.D. | FLOOR DRAIN |
| F.S. | FOOTING STEP |
| FND | FOUNDATION |
| FRP | FIBERGLASS-REINFORCED PLASTIC |
| FT | FOOT, FEET |
| FTG | FOOTING |
| GALV. | GALVANIZED |
| GND | GROUND |
| H.C. | HOLLOW CORE |
| HGT | HEIGHT |
| HORIZ. | HORIZONTAL |
| H.P. | HIGH POINT |
| I.D. | INSIDE DIAMETER |
| INV. EL. | INVERT ELEVATION |
| ISF | INSIDE FACE |
| JST | JOIST |
| JT. | JOINT |
| LB | POUND, POUNDS |
| LONGIT. | LONGITUDINAL |
| L.P. | LOW POINT |
| LVL | LEVEL |
| LVR | LOUVER |
| MATL | MATERIAL |
| MAX. | MAXIMUM |
| MECH. | MECHANICAL |
| MIN. | MINIMUM |
| N | NORTH |
| N/A | NOT APPLICABLE |
| N.T.S. | NOT TO SCALE |
| O.C. | ON CENTERS |
| O.D. | OUTSIDE DIAMETER |
| OPNG | OPENING |
| OSF | OUTSIDE FACE |
| PL | PLATE |
| PSF | POUNDS PER SQUARE FOOT |
| REINF. | REINFORCEMENT |
| REF. | REFER TO |
| S | SOUTH |
| SER | STRUCTURAL ENGINEER OF RECORD |
| SIM. | SIMILAR |
| SOG | SLAB ON GRADE |
| SPEC. | SPECIFICATION |
| SQ. | SQUARE |
| S.S. | STAINLESS STEEL |
| STD | STANDARD |
| STL | STEEL |
| STRUCT | STRUCTURAL |
| T&B | TOP AND BOTTOM |
| T/, T.O. | TOP OF |
| T.O.S | TOP OF STEEL |
| T.O.W. | TOP OF WALL |
| TDE | TOP OF DECK ELEVATION |
| T.F.E. | TOP OF FOOTING ELEVATION |
| T.S.E. | TOP OF SLAB ELEVATION |
| TRANSV. | TRANSVERSE |
| TYP. | TYPICAL |
| U.N.O. | UNLESS NOTED OTHERWISE |
| VERT. | VERTICAL |
| VIF | VERIFY IN FIELD |
| W | WEST |
| WDW | WINDOW |
| W/ | WITH |
| W/O | WITHOUT |
| W.P. | WORKING POINT |
| WS | WATERSTOP |

SEH

COLORADO LICENSED
DAVID A. KEMPF
10/17/19
41222
PROFESSIONAL ENGINEER


Owner
City of Greeley
10th Street
Greeley, Colorado 80631
970.350.9777

Architect/ Civil Engineer/ Structural
Short Elliott Hendrickson, Inc.
2000 South Colorado Boulevard
Tower One, Suite 6000
Denver, Colorado 80222
720.540.6800

Landscape Architect
DHM Design
900 South Broadway
Denver, Colorado 80209
303.892.5566

Mechanical Engineer
The Ballard Group, Inc
2525 South Wadsworth Blvd, Suite 200
Lakewood, CO 80227
303.988.4514

Electrical Engineer
CMO Consulting Eng
11646 Sun Bear Trail
Golden, CO 80403
303.875.4037


City of Greeley
**Greeley Fire Station #2**
2301 Reservoir Rd, Greeley, CO 80634


This drawing is an instrument of service and shall remain the property of Short Elliott Hendrickson, Inc. (SEH). This drawing, concepts and ideas contained herein shall not be used, reproduced, revised, or retained without the express written approval of SEH.

Submission or distribution of this drawing to meet official or regulatory requirements or for purposes in connection with the project is not be construed as publication in derogation of any of the rights of SEH.

COPYRIGHT © 2019
Short Elliott Hendrickson, Inc.
All Rights Reserved


| | |
|---|---|
| **SEH Project** | 150268 |
| **Checked By** | DK |
| **Drawn By** | EE/DK |

| Project Status | Issue Date |
|---|---|
| 30% DESIGN | 6/26/2019 |
| 75% DESIGN | 8/29/2019 |
| 100% DESIGN | 10/18/2019 |

**Revision Issue**

| Rev. # | Description | Date |
|---|---|---|
| 1 | Addendum #1 | 9/18/19 |
| 2 | Addendum #2 | 10/18/19 |

GENERAL STRUCTURAL NOTES

S
002

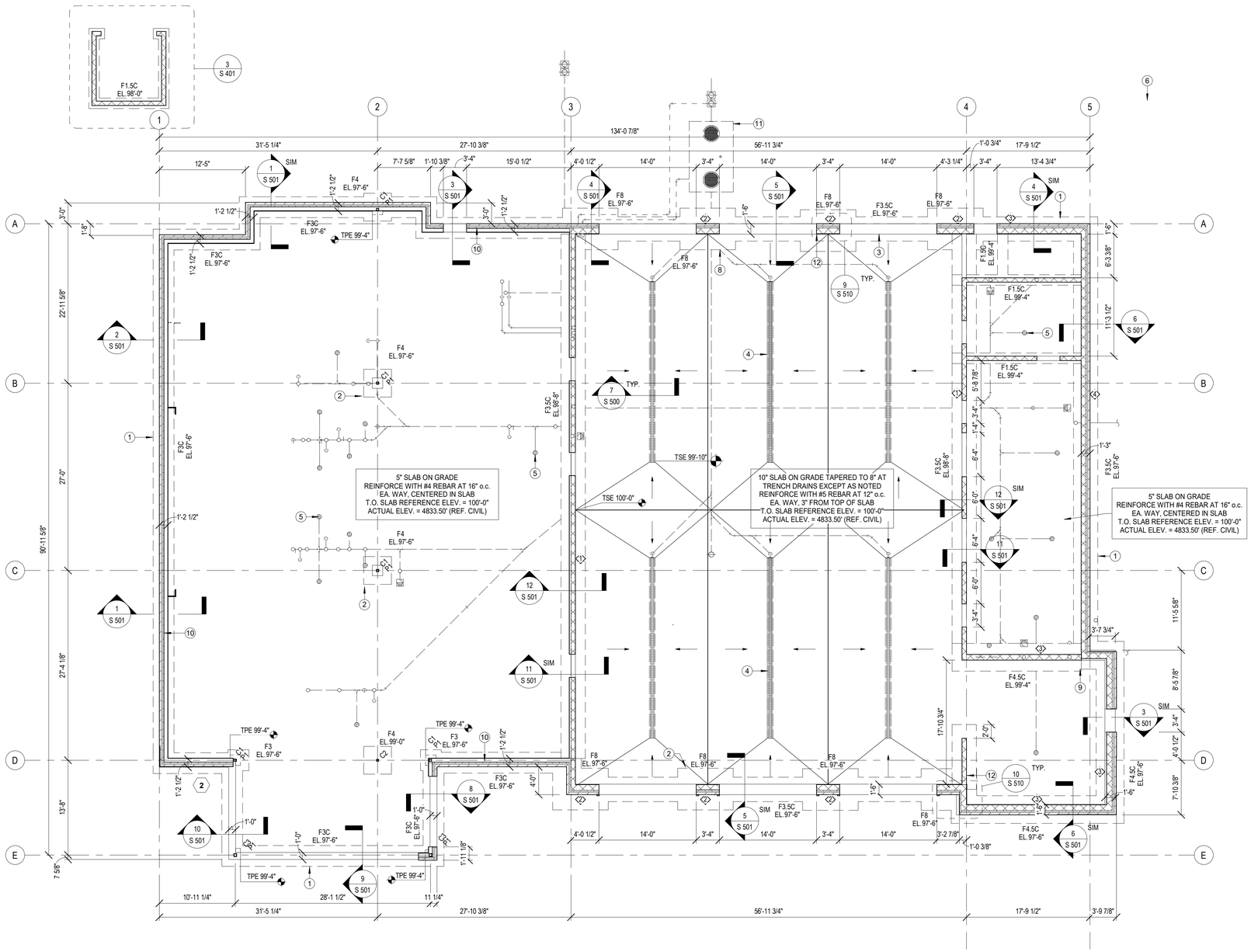


1 FOUNDATION PLAN
1/8" = 1'-0"

## FOUNDATION PLAN NOTES

(TYPICAL UNLESS NOTED OTHERWISE)

1. FOR GENERAL NOTES AND MATERIAL SPECIFICATIONS SEE SHEET S001 AND S002.
2. FOR ALL DIMENSIONS AND CONDITIONS NOT SHOWN, SEE ARCHITECTURAL PLANS.
3. REFERENCE CIVIL DRAWINGS FOR EXTERIOR GRADING.
4. REFERENCE SHEETS S 500 FOR TYPICAL DETAILS.
5. GROUND FLOOR ELLEVATION = 100'-0" = 4833.50' RE: CIVIL.
6. FORM CONTROL JOINTS OR SAWCUT WITHIN 18 HOURS OF CONCRETE PLACEMENT SEE DETAIL 4 / S 500. MAXIMUM SPACING OF CONTROL JOIST TO BE, UNO:
   10-INCH SLAB: 15'-0"
   5-INCH SLAB: 10'-0"
7. 'Fx' DENOTES FOOTING TYPE. REF. SCHEDULE ON SHEET S101 AND DETAILS.
8. TOP OF FOOTING ELEVATION (TFE):
   A. INTERIOR: 99'-0" U.N.O.
   B. EXTERIOR: 97'-6" U.N.O.
9. DESIGN ALLOWABLE SOIL BEARING CAPACITY:
   (REF. GEOTECHNICAL REPORT): 2,500 PSF
10. CONTRACTOR TO IMMEDIATELY CONTACT STRUCTURAL ENGINEER FOR FIELD VERIFICATION IF EXISTING CONDITIONS VARY FROM THOSE STATED IN THESE DOCUMENTS.
11. Cx DENOTES COLUMN DESIGNATION - SEE SHEET S101 FOR COLUMN SCHEDULE.
12. SLOPE CONCRETE TO FLOOR DRAINS. REFER TO PLUMBING DRAWINGS FOR FLOOR DRAIN LOCATIONS AND DRAIN RIM ELEVATION BELOW FINISH FLOOR.
13. ⟶ INDICATES SLOPE TO DRAIN, REF. ARCH.
14. ABBREVIATIONS:
    TFE= TOP OF FOOTING ELEVATION
    TSE= TOP OF SLAB ELEVATION
    TPE = TOP OF PIER ELEVATION
    TWE = TOP OF WALL ELEVATION
    VLE = VENEER LEDGE ELEVATION
    VLS = VENEER LEDGE STEP
    F.S.= FOOTING STEP
    C.J.= CONTROL JOINT
15. INDICATES STEP.
16. (#) = LIGHT GAGE SHEAR WALL TYPE. ALL EXTERIOR LIGHT GAGE WALLS ARE SHEAR WALL TYPE 1. SEE SCHEDULE, SHEET S550, UNO.

## KEYNOTE LEGEND

| | |
|---|---|
| 1 | TYPICAL CONTINUOUS STRIP FOOTING, TYP |
| 2 | PAD FOOTING, TYPICAL, PROVIDE REINFORCING PER SCHEDULE AND DETAILS. |
| 3 | WALL STEP AT THRESHOLD, TYP |
| 4 | TRENCH DRAIN, TYP, SEE PLUMBING DRAWINGS |
| 5 | FLOOR DRAIN, TYP SEE PLUMBING DRAWINGS |
| 6 | GENERATOR PAD LOCATION, SEE CIVIL AND ELECTRICAL FOR MORE INFORMATION. FOR GENERATOR PAD SEE 6/S540 |
| 7 | WOODEN FENCE, SEE ARCHITECTURAL AND CIVIL DRAWINGS |
| 8 | SEE FOUNDATION DETAILS FOR CONTRACTOR'S OPTIONS FOR PIPES UNDER FOUNDATIONS |
| 9 | FOOTING STEP, SEE DETAILS |
| 10 | ALL EXTERIOR WALLS SHALL BE SHEAR WALLS TYPE 1, SEE SHEAR WALL SCHEDULE SHEET S 550 |
| 11 | GREASE INTERCEPTOR, SEE PLUMBING DRAWINGS FOR MORE INFORMATION |
| 12 | MASONRY PIER, SEE SHEET S 502 |

## STRUCTURAL COLUMN / PIER SCHEDULE

| MARK | DESIGNATION | BASE PLATE | CAP PLATE | COMMENTS |
|---|---|---|---|---|
| C1 | HSS 4x4x5/16 | A | 3/8" | SEE BASE PLATE DETAIL ON S 530 |
| C2 | HSS 3-1/2x3½2x5/16 | A | 3/8" | SEE BASE PLATE DETAIL ON S 530 |
| C3 | HSS5X5X3/8 | B | 1/2" | SEE BASE PLATE DETAIL ON S 530 |
| P1 | 18" x 18" | | | SEE DETAILS FOR PIER SECTIONS AND REINFORCING |

## FOUNDATION SCHEDULE

| MARK | LENGTH | WIDTH | THICKNESS | REINFORCING |
|---|---|---|---|---|
| F1.5C | | 1'-6" | 1'-0" | (3) CONT. #5 REBAR, BOTTOM |
| F3 | 3'-0" | 3'-0" | 1'-0" | (3) #5 REBAR EA. WAY., BOTTOM |
| F3.5C | | 3'-6" | 1'-0" | (4) #5 CONTINUOUS; #5 @ 12" TRANSV. |
| F3C | | 3'-0" | 1'-0" | (3) CONT. #5 REBAR, BOTTOM W/#5 @ 12" o.c. |
| F4 | 4'-0" | 4'-0" | 1'-0" | (5) #5 REBAR EA. WAY., BOTTOM W/#5 @ 12" o.c. |
| F4.5C | | 4'-0" | 1'-0" | (5) CONT. #5 REBAR, BOTTOM W/#5 @ 12" o.c. |
| F8 | 8'-0" | 6'-0" | 1'-0" | (9) #5 REBAR SHORT DIRECTION<br>(7) #5 REBAR LONG DIRECTION |

## MASONRY REINFORCING SCHEDULE

| WALL NUMBER | CMU SIZE | REINFORCING | NOTES |
|---|---|---|---|
| 1 | 8" | #5 AT 16" o.c. | (1) #5 REBAR IN (3) SOLID GROUTED CORES EA. END |
| 2 | 10" | (2) #6 AT 8" o.c. | 1/4" TIES BELOW BEARING SEE DETAIL |
| 3 | 10" | (2) #5 AT 24" o.c. | (2) #5 IN (2) SOLID GROUTED CORES EA. END |
| 4 | 8" | #5 AT 24" o.c. | (2) #5 IN (2) SOLID GROUTED CORES EA. END |
| INTERIOR 8" CMU | | | #5 @ 40" o.c. |
| HORIZONTAL STEEL IN ALL WALLS SHALL BE LADDER TRUSS @ 16" o.c. | | | |

SEH

COLORADO LICENSED
DAVID A. KRUSE
EXPIRES 9/30/20
41222
PROFESSIONAL ENGINEER


Owner
City of Greeley
10th Street
Greeley, Colorado 80631
970.350.9777

Architect/ Civil Engineer/ Structural
Short Elliott Hendrickson, Inc.
2000 South Colorado Boulevard
Tower One, Suite 6000
Denver, Colorado 80222
720.540.6800

Landscape Architect
DHM Design
900 South Broadway
Denver, Colorado 80209
303.892.5666

Mechanical Engineer
The Ballard Group, Inc
2525 South Wadsworth Blvd, Suite 200
Lakewood, CO 80227
303.988.4514

Electrical Engineer
CMO Consulting Eng
11646 Sun Bear Trail
Golden, CO 80403
303.875.4037


City of Greeley
# Greeley Fire Station #2
2301 Reservoir Rd, Greeley, CO 80634


This drawing is an instrument of service and shall remain the property of Short Elliott Hendrickson, Inc. (SEH). This drawing, concepts and ideas contained herein shall not be used, reproduced, revised, or retained without the express written approval of SEH.

Submission or distribution of this drawing to meet official or regulatory requirements or for purposes in connection with the project is not be construed as publication in derogation of any of the rights of SEH.

COPYRIGHT © 2019
Short Elliott Hendrickson, Inc.
All Rights Reserved


| | |
|---|---|
| SEH Project | 150268 |
| Checked By | DK |
| Drawn By | EE/DK |

| Project Status | Issue Date |
|---|---|
| 30% DESIGN | 6/26/2019 |
| 75% DESIGN | 8/29/2019 |
| 100% DESIGN | 10/18/2019 |

Revision Issue

| Rev. # | Description | Date |
|---|---|---|
| 1 | Addendum #2 | 10/18/19 |

FOUNDATION PLAN

S
101

10/18/2019 9:55:18 AM

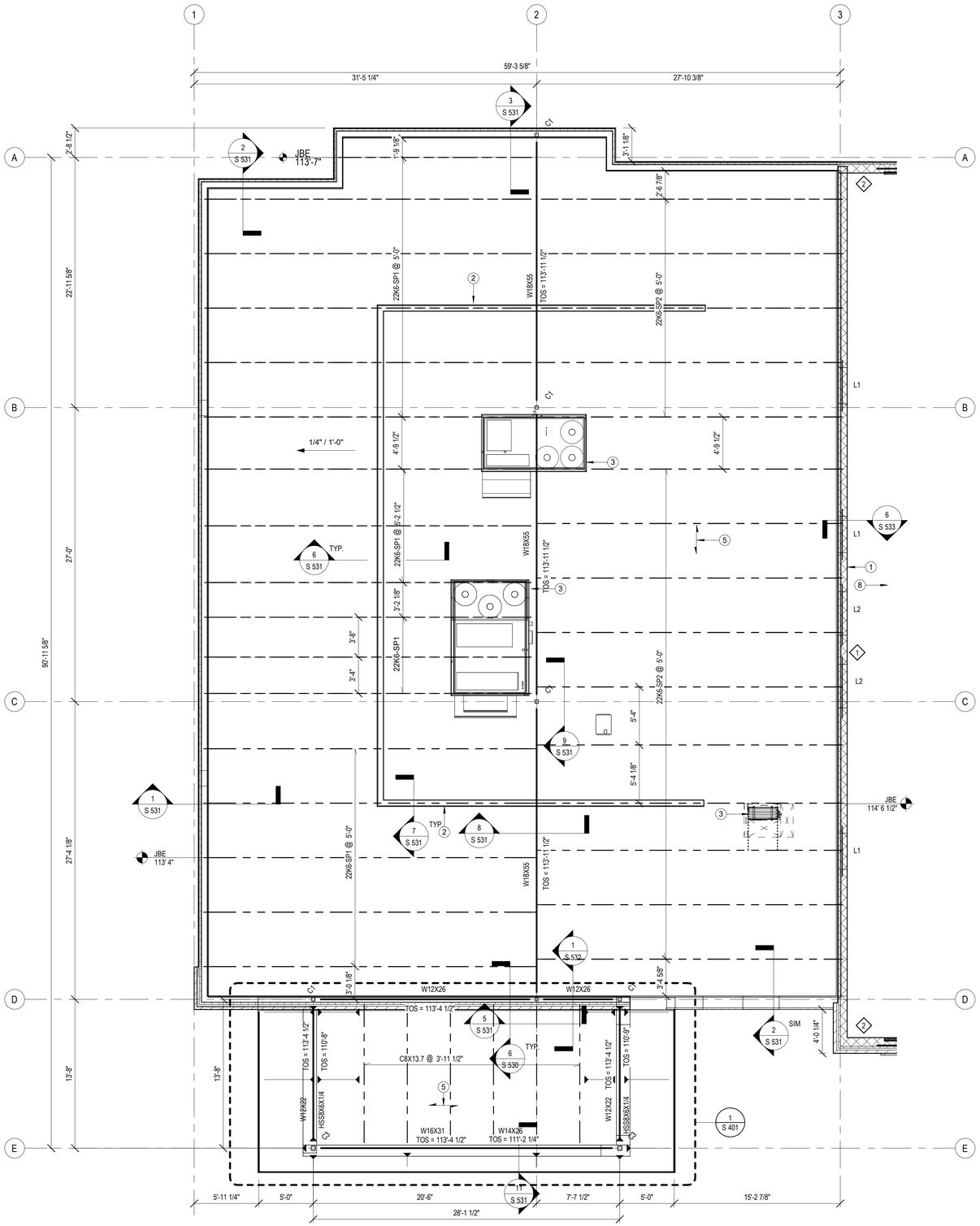


1 LOWER ROOF FRAMING PLAN
3/16" = 1'-0"

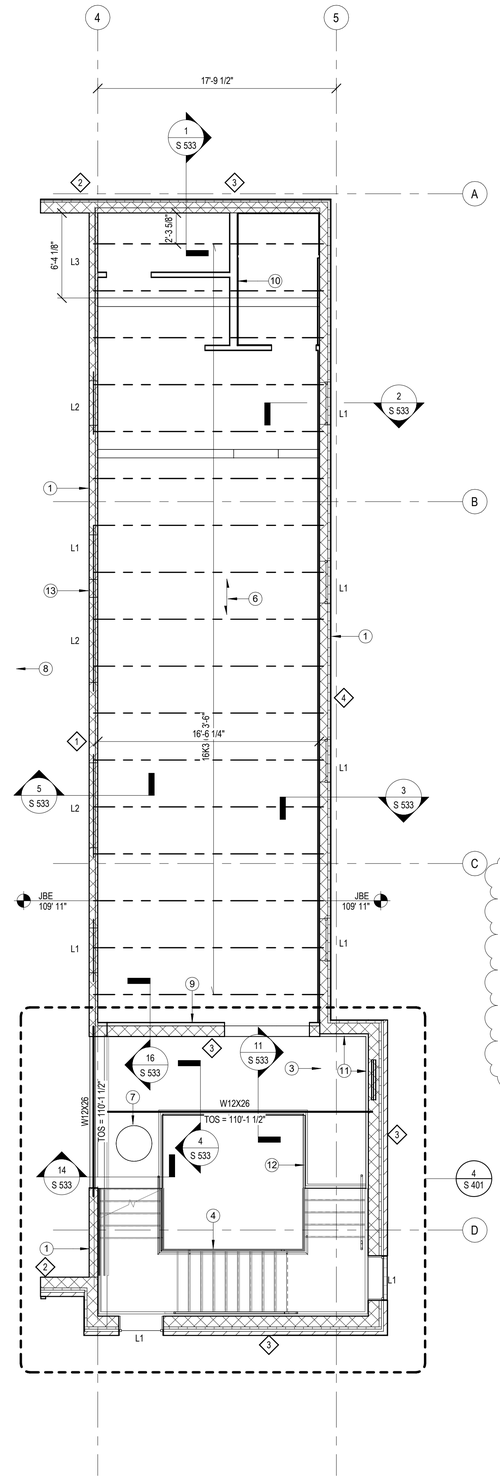


2 MEZZANINE FLOOR FRAMING PLAN
3/16" = 1'-0"

## STRUCTURAL ROOF PLAN NOTES

(TYPICAL UNLESS NOTED OTHERWISE)

1. FOR GENERAL NOTES AND MATERIAL SPECIFICATIONS SEE SHEET S 001 AND S 002
2. FOR ALL DIMENSIONS AND CONDITIONS NOT SHOWN, REF. ARCHITECTURAL PLANS.
3. ALL BEAMS LOCATED ON GRIDS OR EQUAL SPACING UNO.
4. SEE ELEVATIONS FOR TOP OF STEEL ELEVATIONS.
5. — DENOTES ROOF DECK SPAN DIRECTION
6. ROOF DECK:
   1 ½" DEEP x 20ga. (0.0358") TYPE B METAL ROOF DECK.
   INSTALL DECK OVER A MINIMUM OF 3 SPANS CONTINUOUS.
   SEE SCHEDULE FOR MORE INFORMATION.
7. MEZZANINE FLOOR FRAMING DECK:
   1 ½" DEEP x 22ga. (0.0295") TYPE CD METAL FORM.
   INSTALL DECK OVER A MINIMUM OF 3 SPANS CONTINUOUS.
   3" CONCRETE TOPPING ON 1.5CD22 CONFORM COMPOSITE DECK.
   REINFORCE WITH 6x6W2.0xW2.0 WELDED WIRE FABRIC.
   SEE SCHEDULE FOR MORE INFORMATION.
8. JOIST AND TRUSS DESIGN CRITERIA:
   DEAD LOAD:
   25psf - TYPICAL U.N.O.
   20psf AT MEZZANINE ROOF
   JOISTS DESIGNED TO SUPPORT ROOF TOP MECHANICAL LOADS ONLY AT LOCATIONS INDICATED ON PLANS.

   SNOW LOAD:
   BALANCED SNOW LOAD: 25.2 psf
9. ABBREVIATIONS:
   TOS = TOP OF STEEL ELEVATION
   TO MAS = TOP OF MASONRY ELEVATION
   JBE = JOIST BEARING ELEVATION
10. JOIST BRIDGING SHALL BE OF THE SIZE, TYPE, AND SPACING AS PER SJI. FINAL SIZES, QUANTITIES, AND LOCATIONS SHALL BE AS PER STEEL JOIST SHOP DRAWINGS. PROVISIONAL LOCATIONS ARE AS INDICATED ON PLANS.
11. CX DENOTES COLUMN DESIGNATION
    SEE SHEET S 101 FOR STRUCTURAL COLUMN SCHEDULE.
12. SEE SHEET S 101 FOR MASONRY REINFORCING SCHEDULE.
13. SEE SHEET S 510 FOR LINTEL SCHEDULE AND INFORMATION.

## KEYNOTE LEGEND

| | |
|---|---|
| 1 | 8-INCH MASONRY WALLS, SEE SECTIONS AND GENERAL DETAILS ON SHEET S 510 |
| 2 | RTU SCREENING, 6" METAL STUD, SEE DETAILS ON SHEET S 530 |
| 3 | RTU, TYP. REF MECH, SEE LOADING |
| 4 | PREFABRICATED STEEL STAIRS |
| 5 | 1.5B METAL DECK, SEE GENERAL NOTES, AND DETAILS ON SHEET S 520 |
| 6 | 3" CONCRETE ON 1.5" METAL DECK, SEE GENERAL NOTES, AND DETAILS ON SHEET S 520 |
| 7 | 3'4" DIAMETER FLOOR CUT |
| 8 | APPARATUS BAY FRAMING, SEE SHEET S103 |
| 9 | 10-INCH MASONRY WALLS, SEE SECTIONS AND GENERAL DETAILS ON SHEET S 510 |
| 10 | ARCH. WALL SEE ARCH. PLANS |
| 11 | L6x4x3/8 LLV @ MASONRY WALL/FLOOR SUPPORT @ LANDING |
| 12 | STAIR STRINGER TO STEEL BEAM, TYP. |
| 13 | CONTINUE DEEPER LINTEL OVER BOTH OPENINGS AT LOCATION. |

## MASONRY REINFORCING SCHEDULE

| WALL NUMBER | CMU SIZE | REINFORCING | NOTES |
|---|---|---|---|
| 1 | 8" | #5 AT 16" o.c. | (1) #5 REBAR IN (3) SOLID GROUTED CORES EA. END |
| 2 | 10" | (2) #6 AT 8" o.c. | 1/4" TIES BELOW BEARING SEE DETAIL |
| 3 | 10" | (2) #5 AT 24" o.c. | (2) #5 IN (2) SOLID GROUTED CORES EA. END |
| 4 | 8" | #5 AT 24" o.c. | (2) #5 IN (2) SOLID GROUTED CORES EA. END |
| INTERIOR 8" CMU | | | #5 @ 40" o.c. |
| HORIZONTAL STEEL IN ALL WALLS SHALL BE LADDER TRUSS @ 16" o.c. | | | |

SEH

COLORADO LICENSED
DAVID A. KREITL
10/18/19
41222
PROFESSIONAL ENGINEER


Owner
City of Greeley
10th Street
Greeley, Colorado 80631
970.350.9777

Architect/ Civil Engineer/ Structural
Short Elliott Hendrickson, Inc.
2000 South Colorado Boulevard
Tower One, Suite 6000
Denver, Colorado 80222
720.540.6800

Landscape Architect
DHM Design
900 South Broadway
Denver, Colorado 80209
303.892.5566

Mechanical Engineer
The Ballard Group, Inc
2525 South Wadsworth Blvd, Suite 200
Lakewood, CO 80227
303.988.4514

Electrical Engineer
CMO Consulting Eng
11646 Sun Bear Trail
Golden, CO 80403
303.875.4037


City of Greeley
# Greeley Fire Station #2
2301 Reservoir Rd, Greeley, CO 80634


This drawing is an instrument of service and shall remain the property of Short Elliott Hendrickson, Inc. (SEH). This drawing, concepts and ideas contained herein shall not be used, reproduced, revised, or retained without the express written approval of SEH.

Submission or distribution of this drawing to meet official or regulatory requirements or for purposes in connection with the project is not be construed as publication in derogation of any of the rights of SEH.

COPYRIGHT © 2019
Short Elliott Hendrickson, Inc.
All Rights Reserved


| | |
|---|---|
| SEH Project | 150268 |
| Checked By | DK |
| Drawn By | EE/DK |

| Project Status | Issue Date |
|---|---|
| 30% DESIGN | 6/26/2019 |
| 75% DESIGN | 8/29/2019 |
| 100% DESIGN | 10/18/2019 |

Revision Issue

| Rev. # | Description | Date |
|---|---|---|
| 1 | Addendum #2 | 10/18/19 |

LOWER ROOF / MEZZANINE PLAN

S
102

10/18/2019 9:55:22 AM

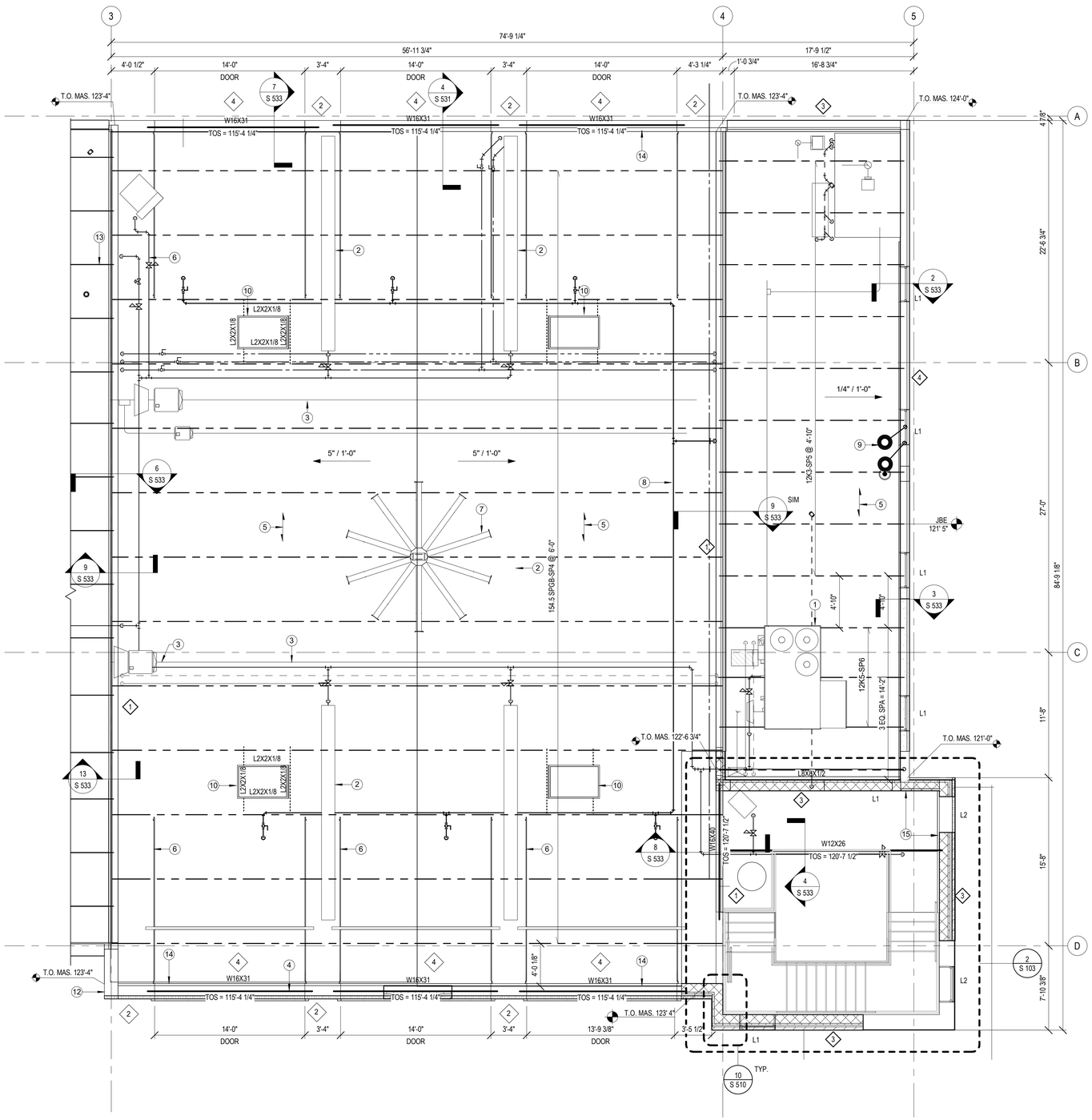


1 APPARATUS AND EXERCISE ROOM ROOF PLAN
3/16" = 1'-0"

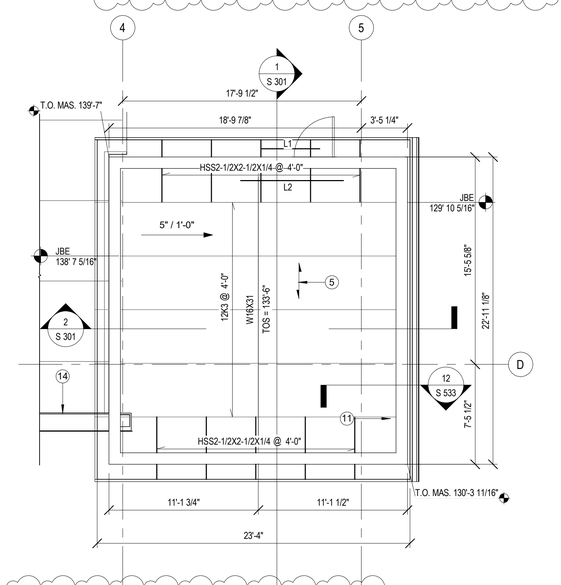


2 HOSE TOWER ROOF FRAMING PLAN
3/16" = 1'-0"

## STRUCTURAL ROOF PLAN NOTES

1. FOR GENERAL NOTES AND MATERIAL SPECIFICATIONS SEE SHEET S 001 AND S 002
2. FOR ALL DIMENSIONS AND CONDITIONS NOT SHOWN, REF. ARCHITECTURAL PLANS.
3. ALL BEAMS LOCATED ON GRIDS OR EQUAL SPACING UNO.
4. SEE ELEVATIONS FOR TOP OF STEEL ELEVATIONS.
5. DENOTES ROOF DECK SPAN DIRECTION
6. ROOF DECK:
   1 ½" DEEP x 22ga. (0.0295") TYPE B METAL ROOF DECK.
   INSTALL DECK OVER A MINIMUM OF 3 SPANS CONTINUOUS.
   SEE SCHEDULE FOR MORE INFORMATION.
7. JOIST AND TRUSS DESIGN CRITERIA:
   DEAD LOAD:
   25psf - TYPICAL U.N.O.
   20psf AT MEZZANINE ROOF
   JOISTS DESIGNED TO SUPPORT ROOF TOP MECHANICAL LOADS ONLY AT LOCATIONS INDICATED ON PLANS.

   SNOW LOAD:
   BALANCED SNOW LOAD: 24.5 psf
8. ABBREVIATIONS:
   TOS = TOP OF STEEL ELEVATION
   TO MAS = TOP OF MASONRY ELEVATION
   JBE = JOIST BEARING ELEVATION
9. JOIST BRIDGING SHALL BE OF THE SIZE, TYPE, AND SPACING AS PER SJI. FINAL SIZES, QUANTITIES, AND LOCATIONS SHALL BE AS PER STEEL JOIST SHOP DRAWINGS. PROVISIONAL LOCATIONS ARE AS INDICATED ON PLANS.
10. CX DENOTES COLUMN DESIGNATION
    SEE SHEET S 101 FOR STRUCTURAL COLUMN SCHEDULE.
10. SEE SHEET S 560 FOR JOIST LOADING DIAGRAMS.

## KEYNOTE LEGEND

| | |
|---|---|
| 1 | RTU, TYP. REF MECH. SEE LOADING |
| 2 | LINEAR RADIANT TUBE HEATING, TYP. |
| 3 | MECH. DUCT, TYP |
| 4 | SEE LINTEL. SEE DETAILS ON SHEET S 530 |
| 5 | 1.5B METAL DECK, SEE GENERAL NOTES, AND DETAILS ON SHEET S 520 |
| 6 | OVERHEAD SECTIONAL DOOR TRACK, HUNG FROM TRUSSES ABOVE, SEE ARCH |
| 7 | FAN, SEE ARCH AND MECHANICAL |
| 8 | PIPING, SEE PLUMBING |
| 9 | ROOF DRAIN, SEE ARCH AND PLUMBING |
| 10 | SKYLIGHT, SEE ARCH |
| 11 | 10-INCH MASONRY WALLS, SEE SECTIONS AND GENERAL DETAILS ON SHEET S 510 |
| 12 | METAL STUD FRAMING ABOVE, SEE SECTIONS |
| 13 | LOWER ROOF JOISTS OVER LIVING QUARTERS, SEE PLAN |
| 14 | APPARATUS BAY GABLE END FRAMING |
| 15 | L6x4x3/8 LLV @ MASONRY WALL/FLOOR SUPPORT @ LANDING |

### MASONRY REINFORCING SCHEDULE

| WALL NUMBER | CMU SIZE | REINFORCING | NOTES |
|---|---|---|---|
| 1 | 8" | #5 AT 16" o.c. | (1) #5 REBAR IN (3) SOLID GROUTED CORES EA. END |
| 2 | 10" | (2) #6 AT 8" o.c. | 1/4" TIES BELOW BEARING SEE DETAIL |
| 3 | 10" | (2) #5 AT 24" o.c. | (2) #5 IN (2) SOLID GROUTED CORES EA. END |
| 4 | 8" | #5 AT 24" o.c. | (2) #5 IN (2) SOLID GROUTED CORES EA. END |
| INTERIOR 8" CMU | | | #5 @ 40" o.c. |
| HORIZONTAL STEEL IN ALL WALLS SHALL BE LADDER TRUSS @ 16" o.c. | | | |

SEH

COLORADO LICENSED
DAVID A. KNELL
REGISTERED
41222
PROFESSIONAL ENGINEER


Owner
City of Greeley
10th Street
Greeley, Colorado 80631
970.350.9777

Architect/ Civil Engineer/ Structural
Short Elliott Hendrickson, Inc.
2000 South Colorado Boulevard
Tower One, Suite 6000
Denver, Colorado 80222
720.540.6800

Landscape Architect
DHM Design
900 South Broadway
Denver, Colorado 80209
303.892.5566

Mechanical Engineer
The Ballard Group, Inc
2525 South Wadsworth Blvd, Suite 200
Lakewood, CO 80227
303.988.4514

Electrical Engineer
CMO Consulting Eng
11646 Sun Bear Trail
Golden, CO 80403
303.875.4037


City of Greeley
# Greeley Fire Station #2
2301 Reservoir Rd, Greeley, CO 80634


This drawing is an instrument of service and shall remain the property of Short Elliott Hendrickson, Inc. (SEH). This drawing, concepts and ideas contained herein shall not be used, reproduced, revised, or retained without the express written approval of SEH.

Submission or distribution of this drawing to meet official or regulatory requirements or for purposes in connection with the project is not be construed as publication in derogation of any of the rights of SEH.

COPYRIGHT © 2019
Short Elliott Hendrickson, Inc.
All Rights Reserved


| | |
|---|---|
| SEH Project | 150268 |
| Checked By | DK |
| Drawn By | EE/DK |

| Project Status | Issue Date |
|---|---|
| 30% DESIGN | 6/26/2019 |
| 75% DESIGN | 8/29/2019 |
| 100% DESIGN | 10/18/2019 |

Revision Issue

| Rev. # | Description | Date |
|---|---|---|
| 1 | Addendum #2 | 10/18/19 |

UPPER ROOF PLAN

S
103

10/18/2019 9:55:27 AM

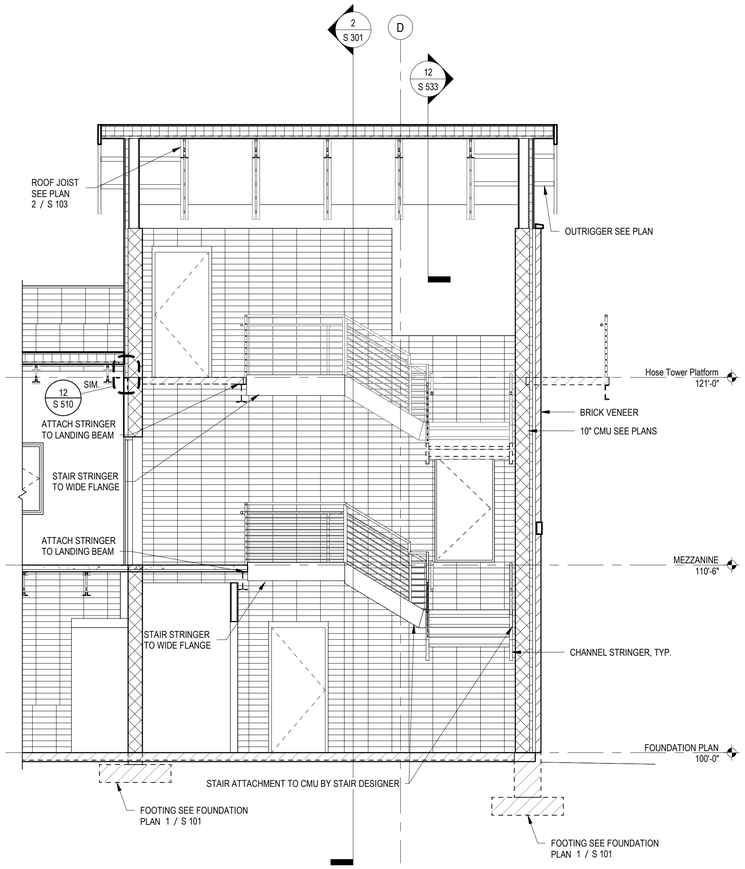


1 TOWER SECTION - NORTH / SOUTH
1/4" = 1'-0"

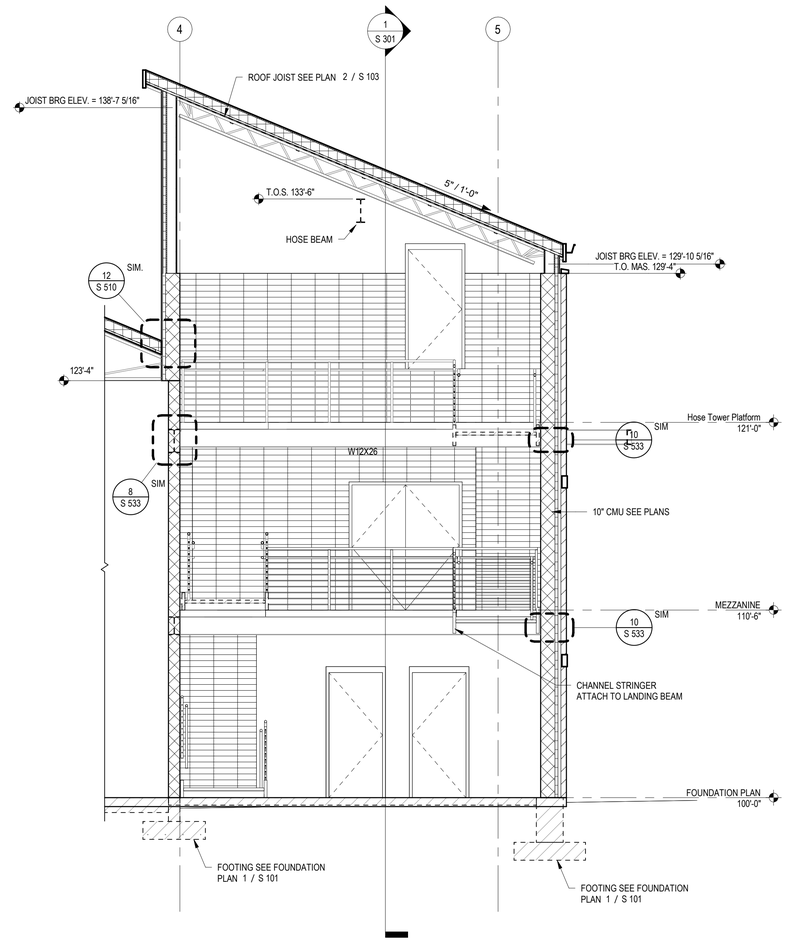


2 TOWER SECTION - EAST / WEST
1/4" = 1'-0"

10/18/2019 9:55:31 AM

SEH

COLORADO LICENSED
DAVID A. KNELL
41222
PROFESSIONAL ENGINEER


Owner
City of Greeley
10th Street
Greeley, Colorado 80631
970.350.9777

Architect/ Civil Engineer/ Structural
Short Elliott Hendrickson, Inc.
2000 South Colorado Boulevard
Tower One, Suite 6000
Denver, Colorado 80222
720.540.6800

Landscape Architect
DHM Design
900 South Broadway
Denver, Colorado 80209
303.892.5566

Mechanical Engineer
The Ballard Group, Inc
2525 South Wadsworth Blvd, Suite 200
Lakewood, CO 80227
303.988.4514

Electrical Engineer
CMO Consulting Eng
11646 Sun Bear Trail
Golden, CO 80403
303.875.4037


City of Greeley
**Greeley Fire Station #2**
2301 Reservoir Rd, Greeley, CO 80634


This drawing is an instrument of service and shall remain the property of Short Elliott Hendrickson, Inc. (SEH). This drawing, concepts and ideas contained herein shall not be used, reproduced, revised, or retained without the express written approval of SEH.

Submission or distribution of this drawing to meet official or regulatory requirements or for purposes in connection with the project is not be construed as publication in derogation of any of the rights of SEH.

COPYRIGHT © 2019
Short Elliott Hendrickson, Inc.
All Rights Reserved


| | |
|---|---|
| **SEH Project** | 150268 |
| **Checked By** | DK |
| **Drawn By** | EE/DK |

| **Project Status** | **Issue Date** |
|---|---|
| 30% DESIGN | 6/26/2019 |
| 75% DESIGN | 8/29/2019 |
| 100% DESIGN | 10/18/2019 |

**Revision Issue**

| **Rev. #** | **Description** | **Date** |
|---|---|---|

SECTIONS

S
301

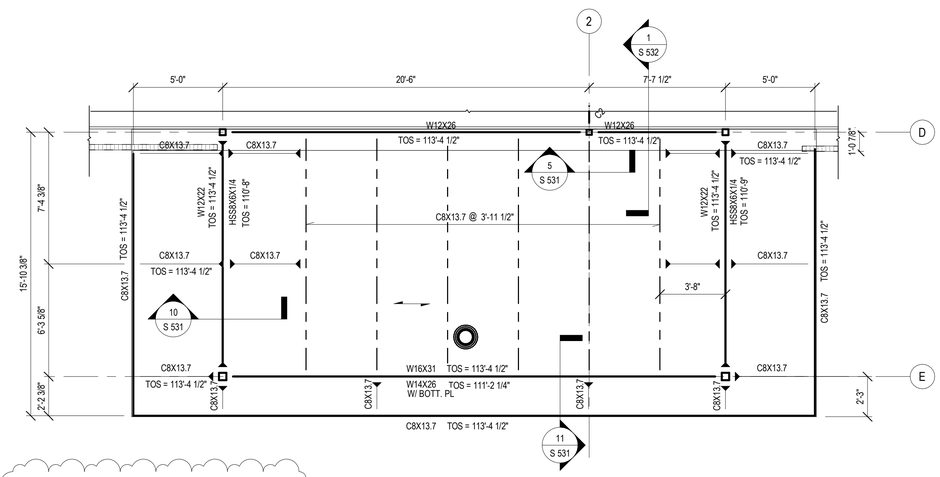


1 ADMIN ROOF ENGLARGED
1/4" = 1'-0"

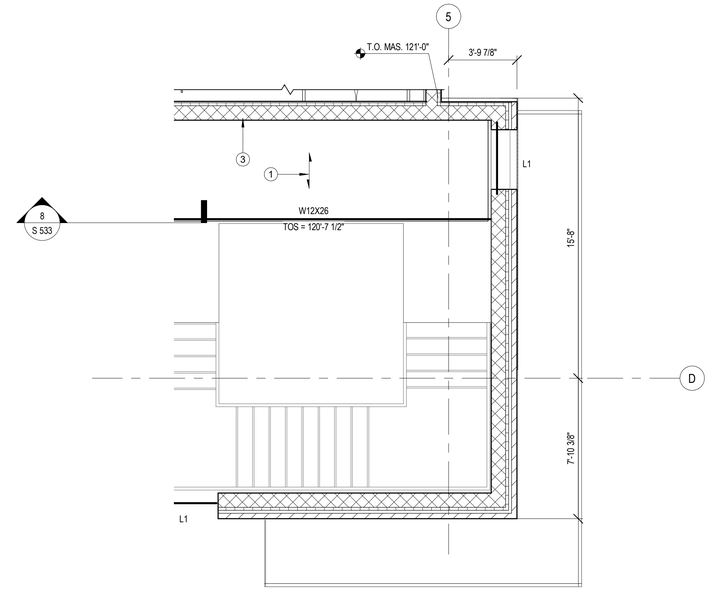


2 HOSE TOWER PLATFORM
1/4" = 1'-0"

**KEYNOTE LEGEND**

1 LIGHTWEIGHT CONCRETE ON METAL DECK
2 PREFABRICATED STEEL STAIRS
3 L6x4x3/8 LLV @ MASONRY WALL/FLOOR SUPPORT @ LANDING

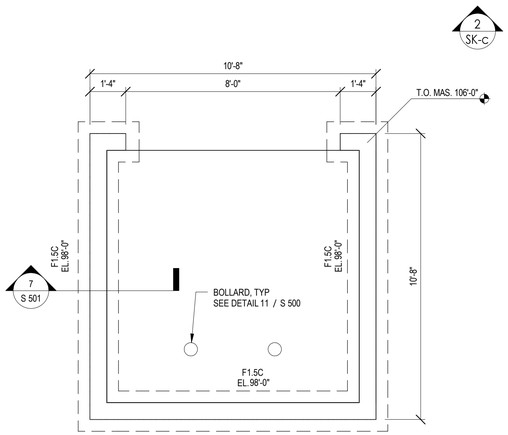


3 TRASH ENCLOSURE PARTIAL PLAN
3/8" = 1'-0"

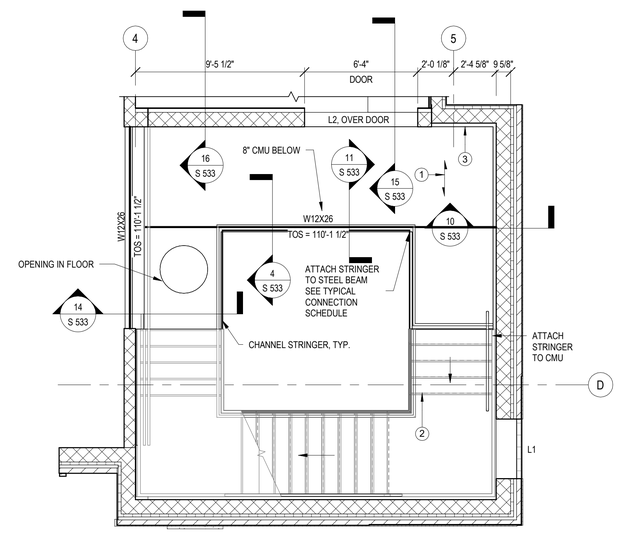


4 MEZZANINE PARTIAL PLAN
1/4" = 1'-0"

SEH

COLORADO LICENSED
DAVID A. KEELL
41222
PROFESSIONAL ENGINEER


Owner
City of Greeley
10th Street
Greeley, Colorado 80631
970.350.9777

Architect/ Civil Engineer/ Structural
Short Elliott Hendrickson, Inc.
2000 South Colorado Boulevard
Tower One, Suite 6000
Denver, Colorado 80222
720.540.6800

Landscape Architect
DHM Design
900 South Broadway
Denver, Colorado 80209
303.892.5566

Mechanical Engineer
The Ballard Group, Inc
2525 South Wadsworth Blvd, Suite 200
Lakewood, CO 80227
303.988.4514

Electrical Engineer
CMO Consulting Eng
11646 Sun Bear Trail
Golden, CO 80403
303.875.4037


City of Greeley
**Greeley Fire Station #2**
2301 Reservoir Rd, Greeley, CO 80634


This drawing is an instrument of service and shall remain the property of Short Elliott Hendrickson, Inc. (SEH). This drawing, concepts and ideas contained herein shall not be used, reproduced, revised, or retained without the express written approval of SEH.

Submission or distribution of this drawing to meet official or regulatory requirements or for purposes in connection with the project is not be construed as publication in derogation of any of the rights of SEH.

COPYRIGHT © 2019
Short Elliott Hendrickson, Inc.
All Rights Reserved


| | |
|---|---|
| **SEH Project** | 150268 |
| **Checked By** | DK |
| **Drawn By** | EE/DK |

| **Project Status** | **Issue Date** |
|---|---|
| 30% DESIGN | 6/26/2019 |
| 75% DESIGN | 8/29/2019 |
| 100% DESIGN | 10/18/2019 |

**Revision Issue**

| **Rev. #** | **Description** | **Date** |
|---|---|---|
| 1 | Addendum #2 | 10/18/19 |

ENLARGED PLANS

S
401

10/18/2019 9:55:35 AM

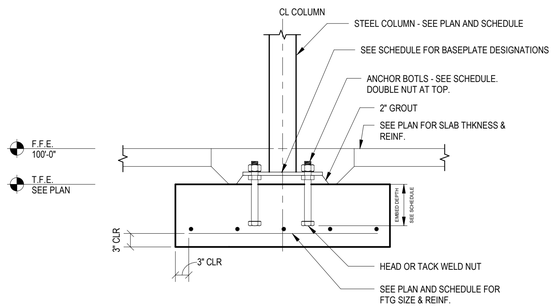


1 SECTION THRU TYPICAL INTERIOR COLUMN
NOT TO SCALE

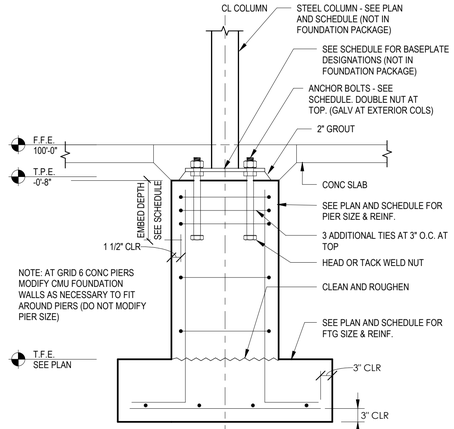


2 SECTION THRU TYPICAL COLUMN WITH PIER
NOT TO SCALE

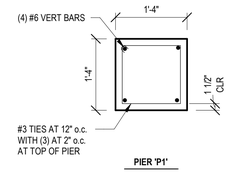


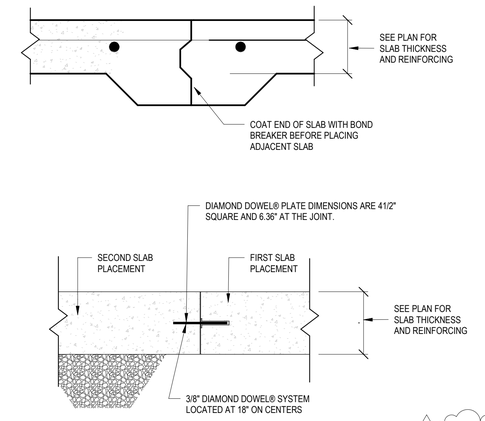


3 CONSTRUCTION JOINT ALTS IN SLAB
NOT TO SCALE

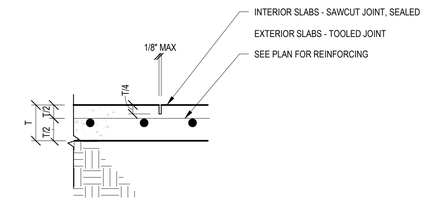


NOTES:
1. SLAB ON GRADE CONTROL JOINTS SHALL BE PLACED AT:
   10'-0" OC MAX FOR 5-INCH SLABS,
   15'-0" OC MAX FOR 10-INCH SLABS,
   AND SHALL NOT EXCEED 1:1.5 WIDTH TO LENGTH RATIO. ALIGN JOINTS WITH GRIDLINES AND COLUMNS WHEREVER POSSIBLE.
2. JOINTING PATTERN IN EXPOSED CONCRETE AREAS SHALL BE AT A REGULAR SPACING.
3. CONTRACTOR SHALL SUBMIT JOINTING PLAN FOR APPROVAL PRIOR TO BEGINNING THE WORK.
4. SEE DRAWINGS FOR SLAB THICKNESS
5. MAKE SAWCUTS PRIOR TO SHRINKAGE CRACKING OF THE SLAB
6. FILL JOINTS W/ JOINT SEALER (UNO)
7. INEXPOSED AREAS, CARE SHALL BE TAKEN WHEN SAW CUTTING

4 SLAB ON GRADE CONTROL JOINT
NOT TO SCALE

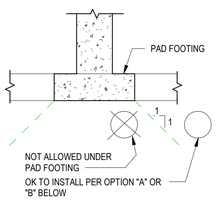


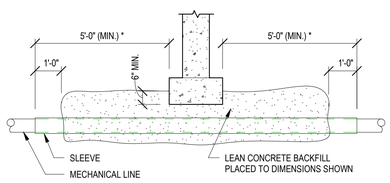


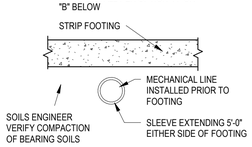


OPTION "A"

NOTE:
DO NOT RUN LINES BENEATH OR WITHIN A 1:1 SLOPE FROM THE EDGE OF PAD FOOTINGS

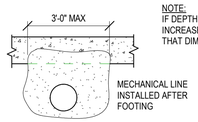


OPTION "B"

NOTE:
IF DEPTH 'D' IS GREATER THEN 4' - 0", INCREASE SLEEVE LENGTH SUCH THAT DIMENSION * IS EQUAL TO 'D'.

5 OPTIONS FOR UTILITIES BELOW FOOTINGS
NOT TO SCALE

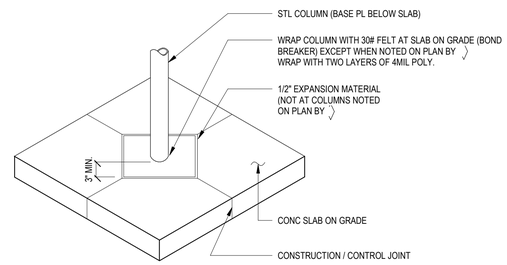


NOTE:
IN EXPOSED AREAS, CARE SHALL BE TAKEN TO PROVIDE LEVEL TRANSITION BETWEEN POURS.

6 SLAB ISOLATION JOINT DETAIL AT COLUMN
NOT TO SCALE

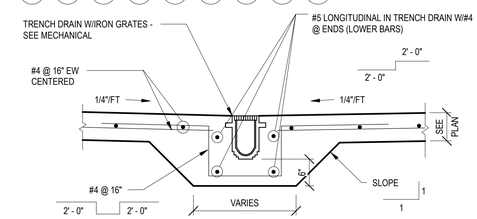


7 TRENCH DRAIN DETAIL
NOT TO SCALE

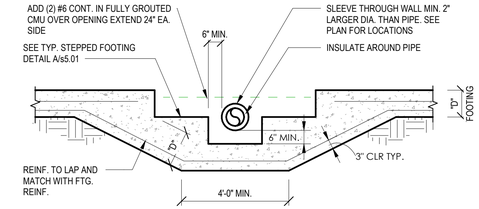


8 TYPICAL UTILITY OPENING THROUGH WALL
NOT TO SCALE

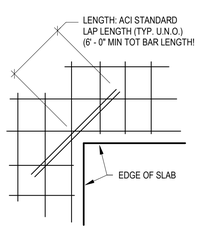


| WALL / SLAB REINF. BARS * | ADDITIONAL CORNER BARS |
|---|---|
| WWF | 2 - #4 |
| #4 | 2 - #4 |
| #5 | 2 - #5 |
| #6 | 2 - #6 |
| #7 | 2 - #5 |
| #8 | 2 - #6 |

* USE LARGEST DIAMETER BAR IN EITHER DIRECTION FOR DETERMINING CORNER BARS.

NOTES:

PROVIDE 2" CLEAR COVER OVER ALL BARS AT OPENINGS

ADDITIONAL CORNER BARS:

WHEN SLAB HAS BOTTOM REINFORCEMENT LAYER ONLY, PLACE DIAGONAL BARS AT MID-SPAN.

WHEN SLAB HAS TOP REINFORCEMENT LAYER ONLY, PLACE DIAGONAL BARS WITH TOP REINFORCEMENT.

WHEN SLAB HAS TOP & BOTTOM REINFORCEMENT LAYERS, PLACE DIAGONAL BARS WITH TOP & BOTTOM REINFORCEMENT.

9 SLAB REENTRANT CORNER DETAIL
NOT TO SCALE

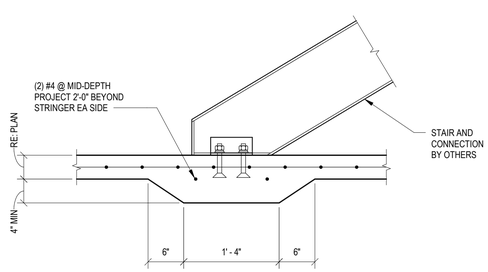


10 THICKENED SLAB @ STAIR STRINGER
NOT TO SCALE

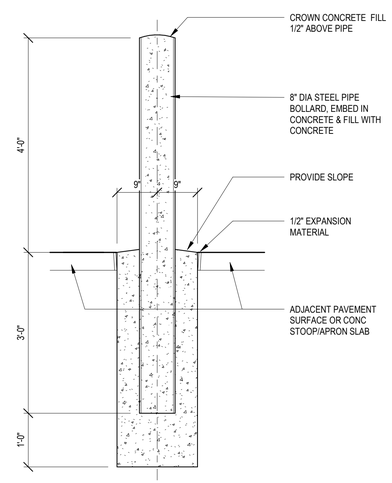


11 TYPICAL BOLLARD DETAIL
NOT TO SCALE

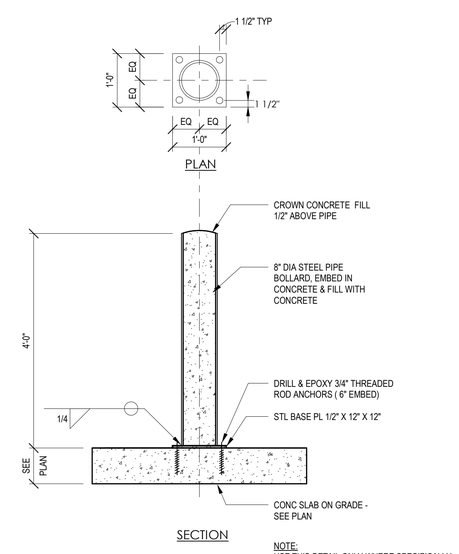


NOTE:
USE THIS DETAIL ONLY WHERE SPECIFICALLY NOTED. OTHERWISE USE F/S5.02.

12 BOLLARD DETAIL - SURFACE MOUNT
NOT TO SCALE

10/18/2019 9:55:38 AM

SEH

COLORADO LICENSED
DAVID A. KNELL
REGISTERED
41222
PROFESSIONAL ENGINEER


Owner
City of Greeley
10th Street
Greeley, Colorado 80631
970.350.9777

Architect/ Civil Engineer/ Structural
Short Elliott Hendrickson, Inc.
2000 South Colorado Boulevard
Tower One, Suite 6000
Denver, Colorado 80222
720.540.6800

Landscape Architect
DHM Design
900 South Broadway
Denver, Colorado 80209
303.892.5666

Mechanical Engineer
The Ballard Group, Inc
2525 South Wadsworth Blvd, Suite 200
Lakewood, CO 80227
303.988.4514

Electrical Engineer
CMO Consulting Eng
11646 Sun Bear Trail
Golden, CO 80403
303.875.4037


City of Greeley
**Greeley Fire Station #2**
2301 Reservoir Rd, Greeley, CO 80634


This drawing is an instrument of service and shall remain the property of Short Elliott Hendrickson, Inc. (SEH). This drawing, concepts and ideas contained herein shall not be used, reproduced, revised, or retained without the express written approval of SEH.

Submission or distribution of this drawing to meet official or regulatory requirements or for purposes in connection with the project is not be construed as publication in derogation of any of the rights of SEH.

COPYRIGHT © 2019
Short Elliott Hendrickson, Inc.
All Rights Reserved


| | |
|---|---|
| **SEH Project** | 150268 |
| **Checked By** | DK |
| **Drawn By** | EE/DK |

| **Project Status** | **Issue Date** |
|---|---|
| 30% DESIGN | 6/26/2019 |
| 75% DESIGN | 8/29/2019 |
| 100% DESIGN | 10/18/2019 |

**Revision Issue**

| **Rev. #** | **Description** | **Date** |
|---|---|---|
| 1 | Addendum #2 | 10/18/19 |

FOUNDATION DETAILS

S
500

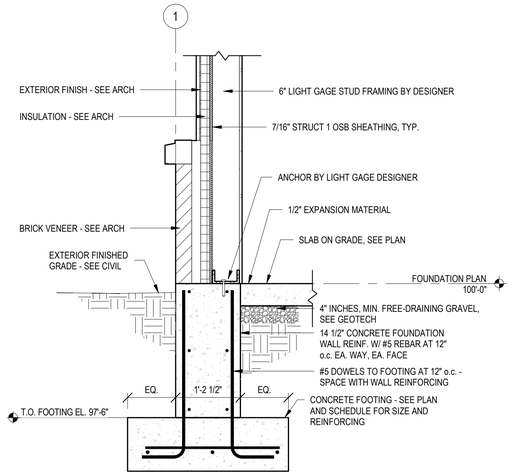


1 FOUNDATION SECTION
3/4" = 1'-0"

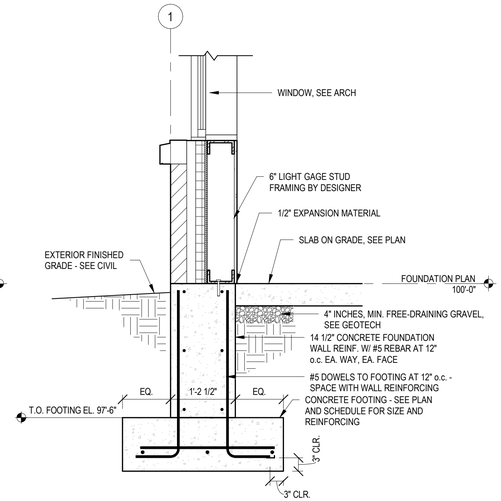


2 FOUNDATION SECTION
3/4" = 1'-0"

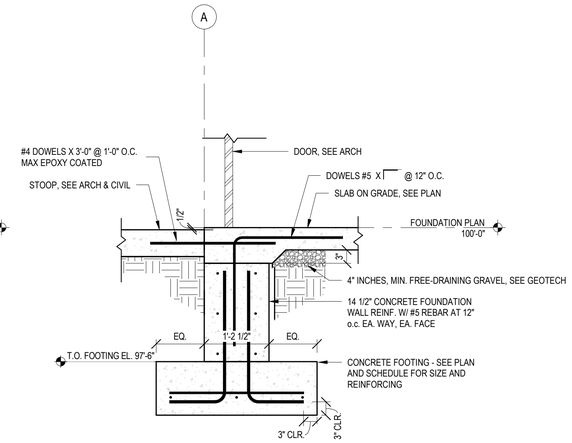


3 FOUNDATION SECTION @ DOOR
3/4" = 1'-0"

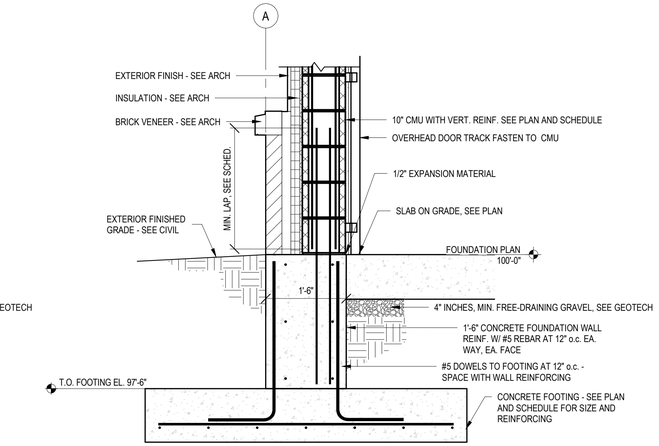


4 FOUNDATION SECTION @ 10" MASONRY
3/4" = 1'-0"

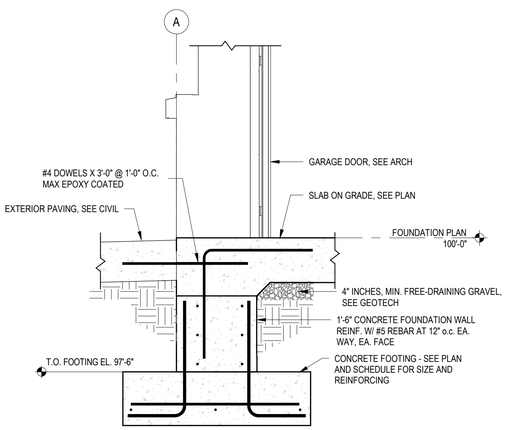


5 FOUNDATION SECTION @ GARAGE DOOR
3/4" = 1'-0"

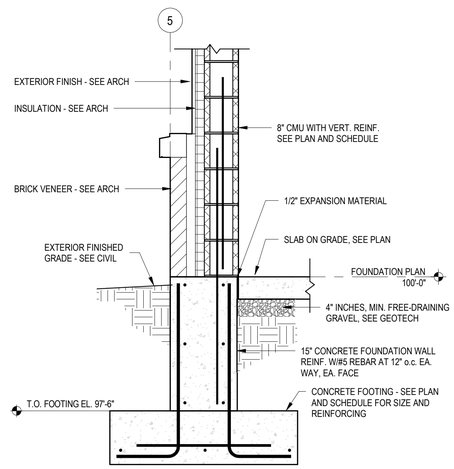


6 FOUNDATION SECTION @ 8" MASONRY
3/4" = 1'-0"

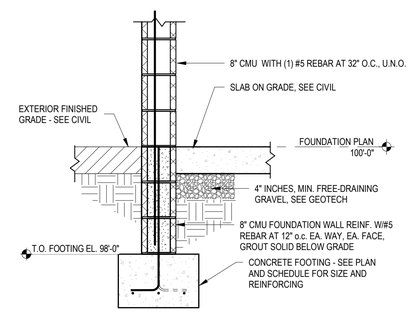


7 FOUNDATION SECTION @ TRASH RACK
3/4" = 1'-0"

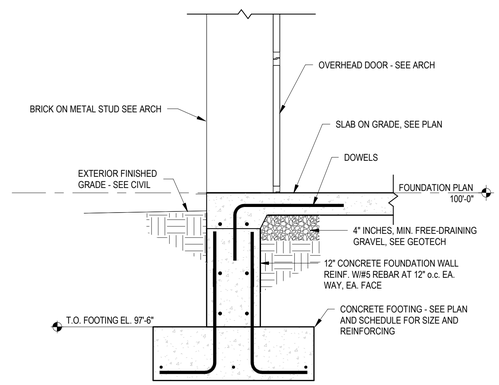


8 FOUNDATION SECTION @ OVERHEAD DOOR
3/4" = 1'-0"

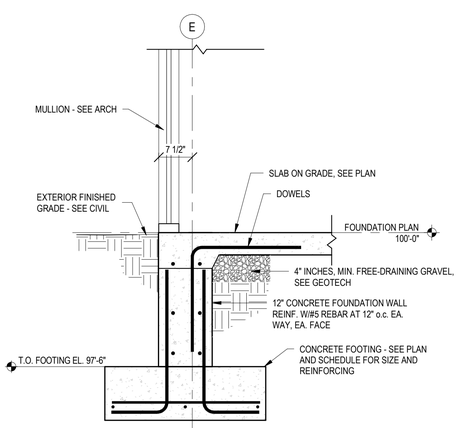


9 FOUNDATION SECTION @ GLASS WALL
3/4" = 1'-0"

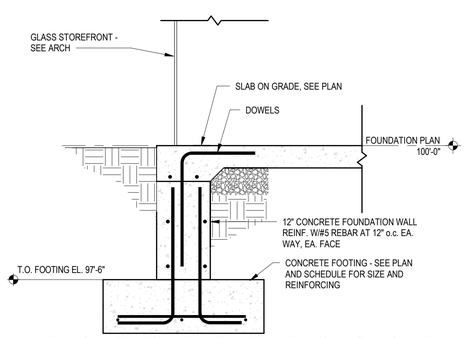


10 FOUNDATION SECTION @ GLASS DOOR
3/4" = 1'-0"

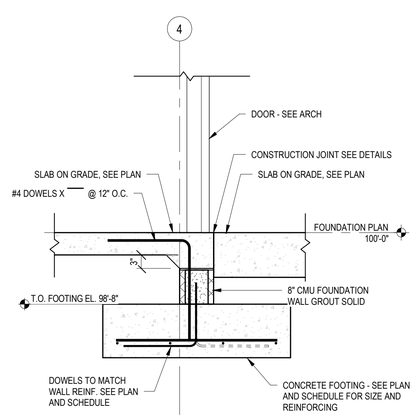


11 FOUNDATION SECTION @ INTERIOR DOOR
3/4" = 1'-0"

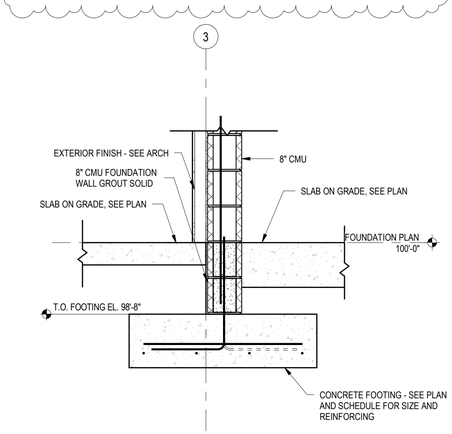


12 FOUNDATION SECTION @ INTERIOR WALL
3/4" = 1'-0"

10/18/2019 9:55:45 AM

SEH

COLORADO LICENSED
DAVID A. KNOLL
41222
PROFESSIONAL ENGINEER


Owner
City of Greeley
10th Street
Greeley, Colorado 80631
970.350.9777

Architect/ Civil Engineer/ Structural
Short Elliott Hendrickson, Inc.
2000 South Colorado Boulevard
Tower One, Suite 6000
Denver, Colorado 80222
720.540.6800

Landscape Architect
DHM Design
900 South Broadway
Denver, Colorado 80209
303.892.5566

Mechanical Engineer
The Ballard Group, Inc
2525 South Wadsworth Blvd, Suite 200
Lakewood, CO 80227
303.988.4514

Electrical Engineer
CMO Consulting Eng
11646 Sun Bear Trail
Golden, CO 80403
303.875.4037


City of Greeley
**Greeley Fire Station #2**
2301 Reservoir Rd, Greeley, CO 80634


This drawing is an instrument of service and shall remain the property of Short Elliott Hendrickson, Inc. (SEH). This drawing, concepts and ideas contained herein shall not be used, reproduced, revised, or retained without the express written approval of SEH.

Submission or distribution of this drawing to meet official or regulatory requirements or for purposes in connection with the project is not be construed as publication in derogation of any of the rights of SEH.

COPYRIGHT © 2019
Short Elliott Hendrickson, Inc.
All Rights Reserved


| | |
|---|---|
| **SEH Project** | 150268 |
| **Checked By** | DK |
| **Drawn By** | EE/DK |

| **Project Status** | **Issue Date** |
|---|---|
| 30% DESIGN | 6/26/2019 |
| 75% DESIGN | 8/29/2019 |
| 100% DESIGN | 10/18/2019 |

**Revision Issue**

| **Rev. #** | **Description** | **Date** |
|---|---|---|
| 1 | Addendum #2 | 10/18/19 |

FOUNDATION DETAILS

S
501

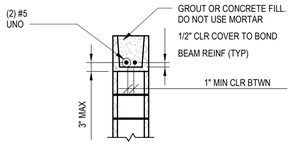


**SECTION**

**NOTE:**
SEE MASONRY PLANS FOR VERTICAL REINFORCEMENT

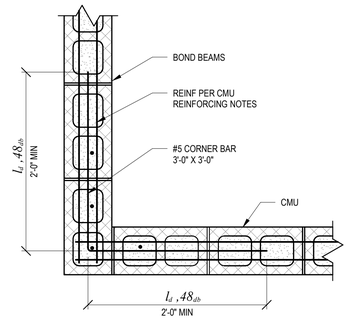


**TYPICAL BOND BEAM REINF @ EXTERIOR & INTERIOR CORNERS**

**NOTE:**
AT CONTROL JOINTS - CONSTRUCT DUMMY JOINTS, WITH JOINT SEALANT AND BACKER ROD, IN BOND BEAM EXPOSED FACES AND CONTINUE REINFORCEMENT AND GROUT THRU JOINT

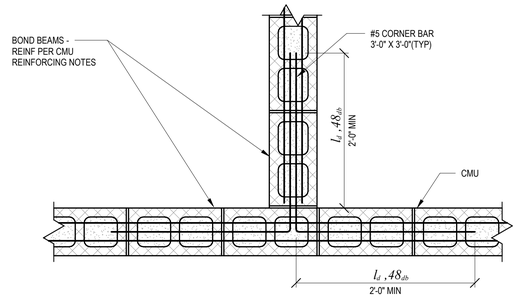


**TYPICAL BOND BEAM REINF @ WALL INTERSECTIONS**

## 1 BOND BEAM REINFORCING
NOT TO SCALE

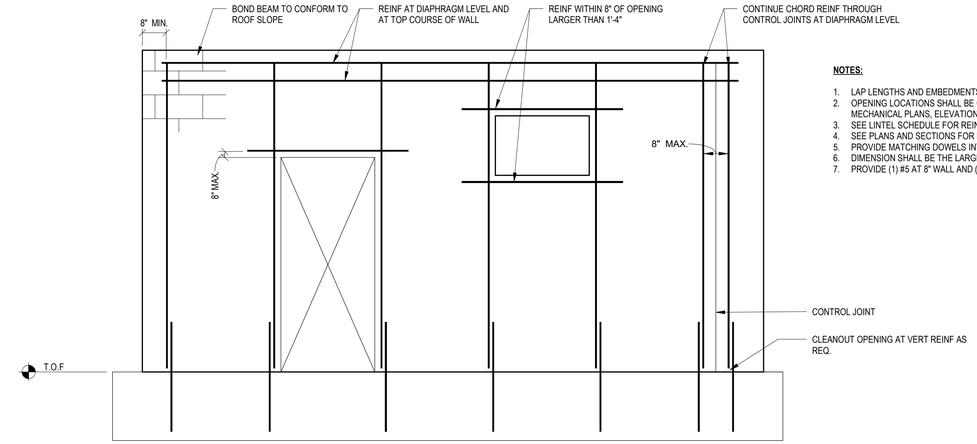


**NOTES:**

1. LAP LENGTHS AND EMBEDMENTS SHALL COMPLY WITH GENERAL NOTES.
2. OPENING LOCATIONS SHALL BE COORDINATED WITH ARCHITECTURAL AND MECHANICAL PLANS, ELEVATIONS & DETAILS.
3. SEE LINTEL SCHEDULE FOR REINF OVER OPENINGS.
4. SEE PLANS AND SECTIONS FOR HORZ AND VERT REINF.
5. PROVIDE MATCHING DOWELS INTO FOUNDATION FOR ALL VERT REINF, UNO.
6. DIMENSION SHALL BE THE LARGER OF THE LAP LENGTH PER 24".
7. PROVIDE (1) #5 AT 8" WALL AND (2) #5 FOR WALLS THICKER THAN 8".

## 2 CMU WALL REINFORCING, TYP.
NOT TO SCALE

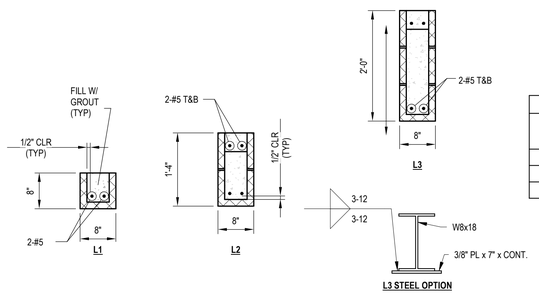


| LINTEL SCHEDULE, UNO | | |
|---|---|---|
| TYPE | CMU OPENING SIZE | |
| | 8" CMU | 10" CMU |
| L1 | 0'-0" TO 3'-6" | 0'-0" TO 2'-0" |
| L2 | > 3'-6" TO 6'-6" | > 2'-0" TO 4'-6" |
| L3 | > 6'-6" TO 10'-6" | > 4'-6" TO 7'-0" |

**NOTES:**

1. THIS SCHEDULE SHALL BE USED FOR OPENINGS IN CMU WALLS WITH OPENINGS NOT NOTED ON PLAN.
2. LINTELS SHALL EXTEND A MINIMUM OF 2'-0" OR 48 BAR DIAMETERS (WHICHEVER IS GREATER) BEYOND EACH SIDE OF OPENING.
3. VERTICAL BARS ABOVE LINTELS SHALL BE EMBEDDED IN LINTELS.

## 3 LINTEL SCHEDULE
NOT TO SCALE

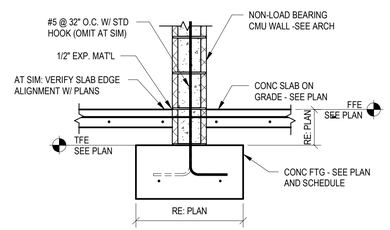


## 4 CMU WALL FOUNDATION SECTION
NOT TO SCALE

NOTE:
UNLESS NOTED OTHERWISE, PROVIDE CONTINUOUS THICKENED SLAB FOOTING AT ALL PARTITION WALLS 8" OR GREATER.

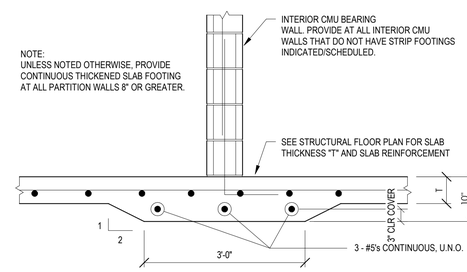


## 5 THICKENED SLAB AT CMU WALL
NOT TO SCALE

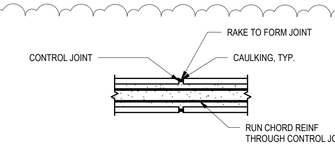


## 6 BOND BEAM CONTROL JOINT, TYP.
NOT TO SCALE

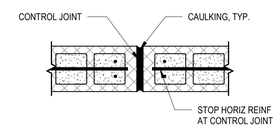


## 7 MASONRY WALL CONTROL JOINT
NOT TO SCALE

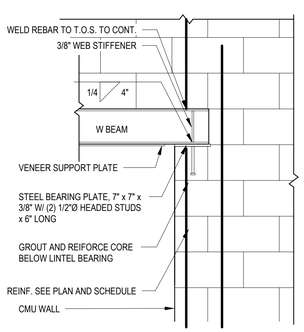


## 8 BEAM / LINTEL SUPPORT DETAIL
3/4" = 1'-0"

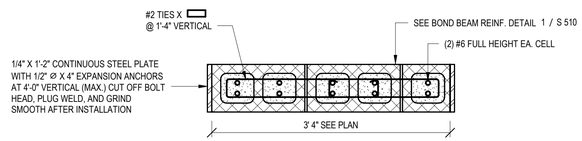


SECTION @ TYPICAL MASONRY PIER

## 9 MASONRY PIER SECTION
NOT TO SCALE

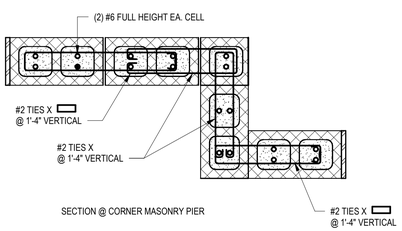


SECTION @ CORNER MASONRY PIER

## 10 MASONRY PIER SECTION
NOT TO SCALE

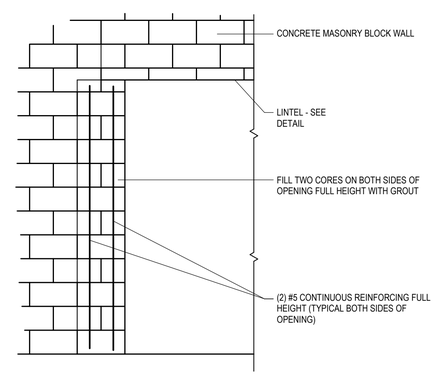


## 11 MASONRY LINTEL SUPPORT DETAIL
NOT TO SCALE

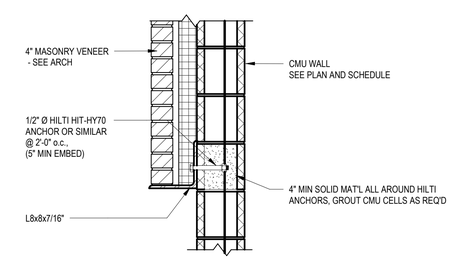


## 12 TYPICAL VENEER LEDGE DETAIL
NOT TO SCALE

10/18/2019 9:55:46 AM

SEH

COLORADO LICENSED
DAVID A. KOCH
10/18/19
41222
PROFESSIONAL ENGINEER


Owner
City of Greeley
10th Street
Greeley, Colorado 80631
970.350.9777

Architect/ Civil Engineer/ Structural
Short Elliott Hendrickson, Inc.
2000 South Colorado Boulevard
Tower One, Suite 6000
Denver, Colorado 80222
720.540.6800

Landscape Architect
DHM Design
900 South Broadway
Denver, Colorado 80209
303.892.5566

Mechanical Engineer
The Ballard Group, Inc
2525 South Wadsworth Blvd, Suite 200
Lakewood, CO 80227
303.988.4514

Electrical Engineer
CMO Consulting Eng
11646 Sun Bear Trail
Golden, CO 80403
303.875.4037


City of Greeley
**Greeley Fire Station #2**
2301 Reservoir Rd, Greeley, CO 80634


This drawing is an instrument of service and shall remain the property of Short Elliott Hendrickson, Inc. (SEH). This drawing, concepts and ideas contained herein shall not be used, reproduced, revised, or retained without the express written approval of SEH.

Submission or distribution of this drawing to meet official or regulatory requirements or for purposes in connection with the project is not be construed as publication in derogation of any of the rights of SEH.

COPYRIGHT © 2019
Short Elliott Hendrickson, Inc.
All Rights Reserved


| | |
|---|---|
| **SEH Project** | 150268 |
| **Checked By** | DK |
| **Drawn By** | EE/DK |

| Project Status | Issue Date |
|---|---|
| 30% DESIGN | 6/26/2019 |
| 75% DESIGN | 8/29/2019 |
| 100% DESIGN | 10/18/2019 |

**Revision Issue**

| Rev. # | Description | Date |
|---|---|---|
| 1 | Addendum #2 | 10/18/19 |

MASONRY DETAILS

S
510

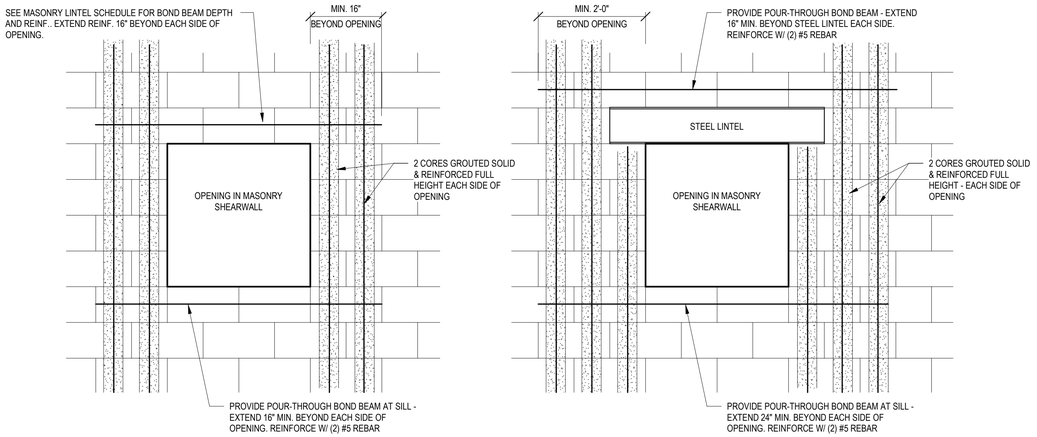


1 PERFORATED MASONRY SHEARWALLS - APPARATUS BAY ONLY

NOT TO SCALE

10/18/2019 9:55:46 AM

SEH

COLORADO LICENSED
DAVID A. KRELL
41222
PROFESSIONAL ENGINEER
10/18/19


Owner
City of Greeley
10th Street
Greeley, Colorado 80631
970.350.9777

Architect/ Civil Engineer/ Structural
Short Elliott Hendrickson, Inc.
2000 South Colorado Boulevard
Tower One, Suite 6000
Denver, Colorado 80222
720.540.6800

Landscape Architect
DHM Design
900 South Broadway
Denver, Colorado 80209
303.892.5566

Mechanical Engineer
The Ballard Group, Inc
2525 South Wadsworth Blvd, Suite 200
Lakewood, CO 80227
303.988.4514

Electrical Engineer
CMO Consulting Eng
11646 Sun Bear Trail
Golden, CO 80403
303.875.4037


City of Greeley

# Greeley Fire Station #2

2301 Reservoir Rd, Greeley, CO 80634


This drawing is an instrument of service and shall remain the property of Short Elliott Hendrickson, Inc. (SEH). This drawing, concepts and ideas contained herein shall not be used, reproduced, revised, or retained without the express written approval of SEH.

Submission or distribution of this drawing to meet official or regulatory requirements or for purposes in connection with the project is not be construed as publication in derogation of any of the rights of SEH.

COPYRIGHT © 2019
Short Elliott Hendrickson, Inc.
All Rights Reserved


| | |
|---|---|
| **SEH Project** | 150268 |
| **Checked By** | DK |
| **Drawn By** | EE/DK |

| **Project Status** | **Issue Date** |
|---|---|
| 30% DESIGN | 6/26/2019 |
| 75% DESIGN | 8/29/2019 |
| 100% DESIGN | 10/18/2019 |

**Revision Issue**

| **Rev. #** | **Description** | **Date** |
|---|---|---|
| 1 | Addendum #2 | 10/18/19 |

1

MASONRY DETAILS

S
511

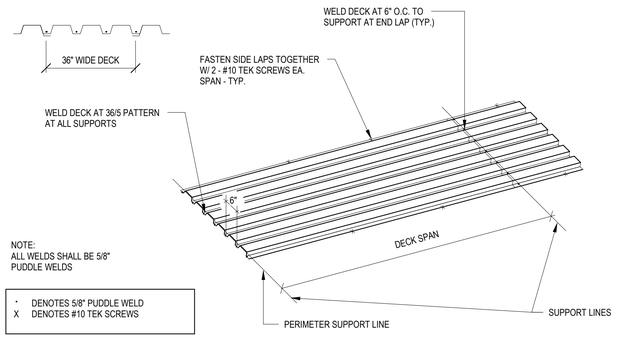


NOTE:
ALL WELDS SHALL BE 5/8" PUDDLE WELDS

| | |
|---|---|
| • | DENOTES 5/8" PUDDLE WELD |
| X | DENOTES #10 TEK SCREWS |

## 1 TYPICAL DECK WELDING DETAIL
NOT TO SCALE

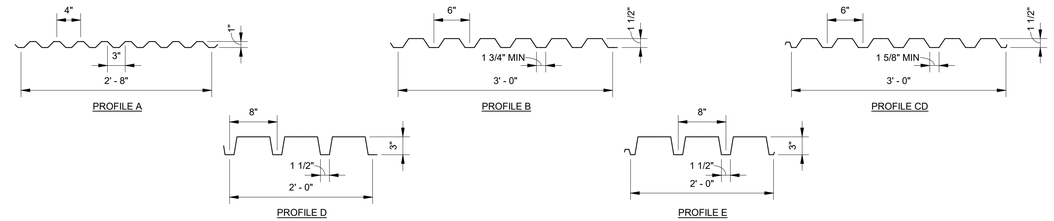


METAL ROOF DECK SCHEDULE

| TYPE | SECTION PROPERTIES | | | | | | | | | | CONNECTIONS | | | | | | DIAPHRAGM CAPACITY (MIN) PLF ASD |
|---|---|---|---|---|---|---|---|---|---|---|---|---|---|---|---|---|---|
| | | | | | | | | | | | PERPENDICULAR SUPPORTS | | PARALLEL SUPPORTS | | SIDE LAPS | | |
| | DEPTH IN | PROFILE | GAUGE | DESIGN THICKNESS | I IN ⁴/FT | Sp IN ³/FT | Sn IN ³/FT | Fy KSI | ACOUSTICAL | FINISH | FASTENER | PATTERN | FASTENER | SPACING | FASTENER | NO. PER SPAN | |
| RD1 | 1 1/2 | B | 20 | 0.0358 | 0.205 | 0.227 | 0.238 | 33 | - | - | 5/8" PUDDLE WELDS | 36/5 | - | - | #10 TEK SCREWS | 2 | 200 |
| RD2 | 4 1/2 | CD | 22 | 0.0295 | 0.157 | 0.176 | 0.183 | 40 | - | - | 5/8" PUDDLE WELDS | 36/5 | - | - | #10 TEK SCREWS | 2 | 275 |

## 2 METAL DECK SCHEDULE
NOT TO SCALE

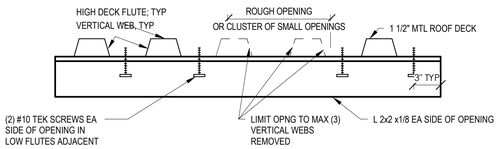


**NOTES:**
1) SEE M/E/P DRAWINGS FOR SIZE AND LOCATIONS.
2) NO REINFORCING IS REQUIRED WHERE OPENING SIZE IS LIMITED TO ONE HIGH FLUTE ONLY (NO CUTTING OF VERTICAL WEBS ALLOWED).
3) SEE DETAIL L/S7.02 FOR REQUIRED REINFORCING AT LARGER OPENINGS.

## 3 TYPICAL ROOF OPENING REINFORCING
NOT TO SCALE

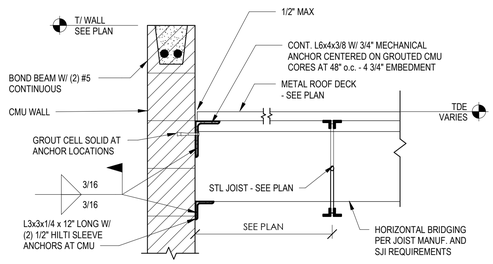


## 4 TYPICAL METAL DECK TO WALL CONNECTION
NOT TO SCALE

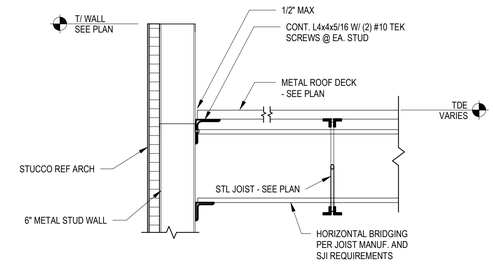


## 5 TYPICAL METAL DECK TO WALL CONNECTION
NOT TO SCALE

10/18/2019 9:55:47 AM

SEH

COLORADO LICENSED
DAVID A. KRELL
REGISTERED
41222
PROFESSIONAL ENGINEER


Owner
City of Greeley
10th Street
Greeley, Colorado 80631
970.350.9777

Architect/ Civil Engineer/ Structural
Short Elliott Hendrickson, Inc.
2000 South Colorado Boulevard
Tower One, Suite 6000
Denver, Colorado 80222
720.540.6800

Landscape Architect
DHM Design
900 South Broadway
Denver, Colorado 80209
303.892.5566

Mechanical Engineer
The Ballard Group, Inc
2525 South Wadsworth Blvd, Suite 200
Lakewood, CO 80227
303.988.4514

Electrical Engineer
CMO Consulting Eng
11646 Sun Bear Trail
Golden, CO 80403
303.875.4037


City of Greeley
**Greeley Fire Station #2**
2301 Reservoir Rd, Greeley, CO 80634


This drawing is an instrument of service and shall remain the property of Short Elliott Hendrickson, Inc. (SEH). This drawing, concepts and ideas contained herein shall not be used, reproduced, revised, or retained without the express written approval of SEH.

Submission or distribution of this drawing to meet official or regulatory requirements or for purposes in connection with the project is not be construed as publication in derogation of any of the rights of SEH.

COPYRIGHT © 2019
Short Elliott Hendrickson, Inc.
All Rights Reserved


| | |
|---|---|
| **SEH Project** | 150268 |
| **Checked By** | DK |
| **Drawn By** | EE/DK |

| Project Status | Issue Date |
|---|---|
| 30% DESIGN | 6/26/2019 |
| 75% DESIGN | 8/29/2019 |
| 100% DESIGN | 10/18/2019 |

**Revision Issue**

| Rev. # | Description | Date |
|---|---|---|
| 1 | Addendum #1 | 9/18/19 |
| 2 | Addendum #2 | 10/18/19 |

STEEL DECK DETAILS

S
520

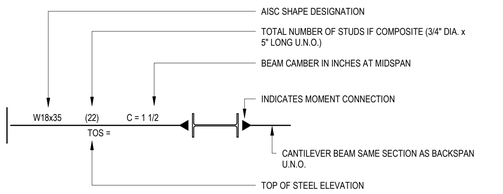


NOTES:

1. TYPICAL CONNECTIONS OF BEAM TO BEAM OR BEAM TO COLUMN SHALL BE SIMPLE SHEAR CONNECTIONS AS NOTED IN CONNECTION SCHEDULE UNLESS INDICATED OTHERWISE ON THE DRAWINGS.
2. IN A MOMENT CONNECTION, THE BEAM WEB SHEAR CONNECTION SHALL BE WELDED OR SLIP CRITICAL BOLTED CONNECTION. SEE DETAIL J/s7.01 FOR TYPICAL MOMENT CONNECTION.
3. WHERE NO REACTION IS NOTED ON THE DRAWINGS, PROVIDE A CONNECTION FOR A REACTION DERIVED FROM THE TABLES OF ALLOWABLE LOADS ON BEAMS, PART 2 OF THE REFERENCED AISC STANDARD GIVEN BEAM, SPAN AND GRADE OF STEEL SPECIFIED MULTIPLIED BY 1.3 FOR NONCOMPOSITE BEAMS AND 2.0 FOR COMPOSITE BEAMS (SHEAR STUDS INDICATED ON PLAN).
4. CONNECTION OF SKEWED BEAM TO COLUMN OR SKEWED BEAM TO BEAM MAY BE SINGLE PLATE "SHEAR TAB".

## 1 ELEMENT LEGEND
NOT TO SCALE

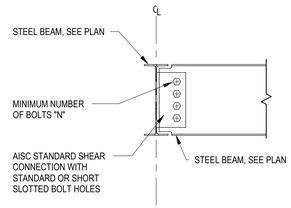


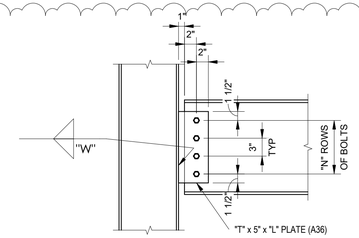


NOTES:

1. ALL CONNECTIONS ARE TO CONFORM TO THE 14TH EDITION OF THE AISC ASD OR LRFD MANUAL.
2. ALL STEEL CONNECTIONS SHALL BE DESIGNED BY THE STEEL FABRICATOR'S LICENSED ENGINEER (DETAILER) FOR THIS PROJECT.
3. DESIGN LOADS GIVEN ON PLAN OR IN THE DETAILS TAKE PRECEDENCE OVER THE LOADS SHOWN IN THIS DETAIL.
4. HOLES SHALL BE HORIZONTAL SHORT SLOTTED HOLES IN PLATE, STANDARD HOLES IN BEAM.
5. WELDING ELECTRODES ARE E70XX.

| "N" ROWS OF A325N BOLTS | BEAM SIZE | BOLT DIA | PLATE THICKNESS "T", IN | PLATE LENGTH "L", IN | WELD SIZE "W", IN | ALLOWABLE LOAD KIPS |
|---|---|---|---|---|---|---|
| 2 | W8-W12 | 3/4" | 1/4 | 6 | 3/16 | 12 |
| 3 | W12-W18 | 3/4" | 1/4 | 9 | 3/16 | 24 |
| 4 | W16-W24 | 3/4" | 5/16 | 12 | 1/4 | 36 |
| 5 | W18-W30 | 3/4' | 5/16 | 15 | 1/4 | 45 |
| 6 | W21-W36 | 3/4" | 3/8 | 18 | 5/16 | 53 |
| 7 | W24-W36 | 3/4" | 3/8 | 21 | 5/16 | 61 |
| 8 | W27-W36 | 1" | 3/8 | 24 | 5/16 | 101 |
| 9 | W30-W36 | 1" | 7/16 | 27 | 3/8 | 133 |

## 2 TYPICAL BEAM CONNECTION SCHEDULE
NOT TO SCALE

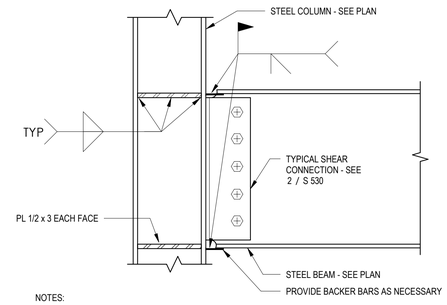


NOTES:

1. ALL CONNECTIONS ARE TO CONFORM TO THE 14TH EDITION OF THE AISC ASD OR LRFD MANUAL.
2. ALL STEEL CONNECTIONS SHALL BE DESIGNED BY THE STEEL FABRICATOR'S LICENSED ENGINEER (DETAILER) FOR THIS PROJECT.

## 3 TYPICAL MOMENT CONNECTION DETAIL
NOT TO SCALE

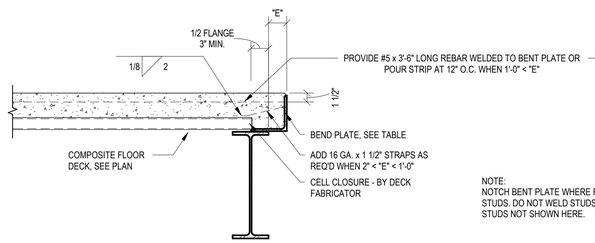


**METAL DECK PERPENDICULAR TO BEAM**

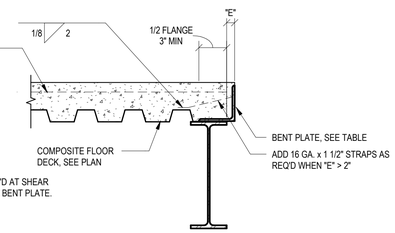


NOTE:
NOTCH BENT PLATE WHERE REQ'D AT SHEAR STUDS. DO NOT WELD STUDS TO BENT PLATE. STUDS NOT SHOWN HERE.

**METAL DECK PARALLEL TO BEAM**

**BENT PLATE TABLE**

| MAXIMUM "E" | PLATE THICKNESS |
|---|---|
| 0' - 9" | 3/16" |
| 1' - 3" | 1/4" |
| 1' - 9" | 5/16" |
| 2' - 3" | 3/8" |

## 4 TYPICAL SLAB EDGE DETAILS
NOT TO SCALE

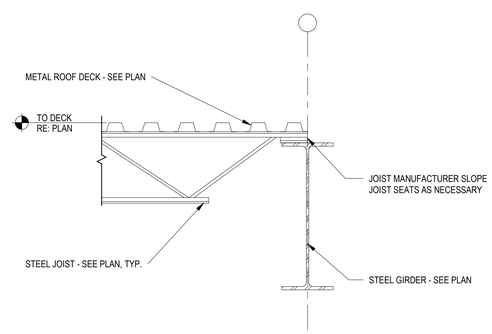


## 5 JOIST TO GIRDER CONNECTION
NOT TO SCALE

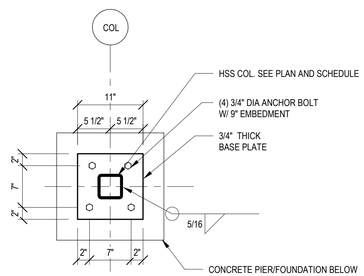


BASE PLATE B

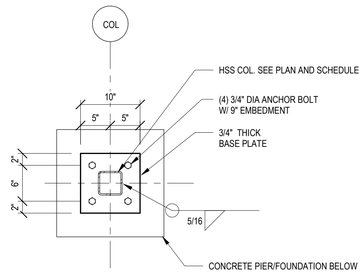


BASE PLATE A

## 9 COLUMN BASE PLATE
NOT TO SCALE

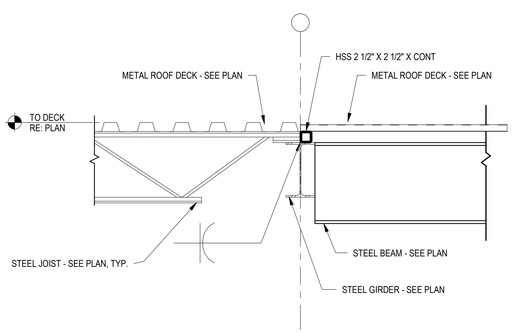


## 6 CHANGE IN DECK SPAN DETAIL
NOT TO SCALE

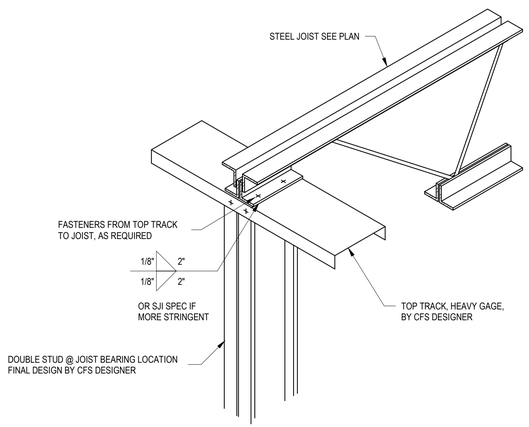


## 7 LOAD BEARING POST AT JOIST
NOT TO SCALE

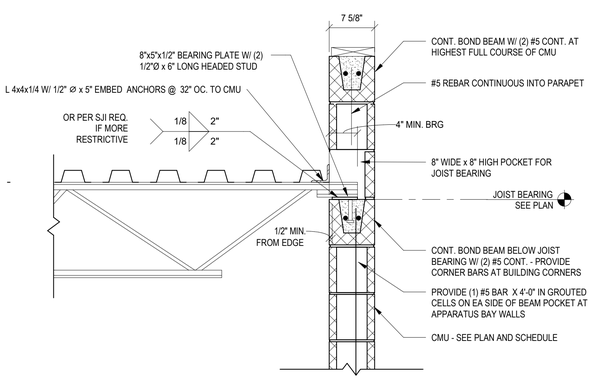


## 8 TYPICAL JOIST BEARING DETAIL
1" = 1'-0"

10/18/2019 9:55:47 AM

SEH

COLORADO LICENSED
DAVID A. KREELL
10/18/19
41222
PROFESSIONAL ENGINEER


Owner
City of Greeley
10th Street
Greeley, Colorado 80631
970.350.9777

Architect/ Civil Engineer/ Structural
Short Elliott Hendrickson, Inc.
2000 South Colorado Boulevard
Tower One, Suite 6000
Denver, Colorado 80222
720.540.6800

Landscape Architect
DHM Design
900 South Broadway
Denver, Colorado 80209
303.892.5566

Mechanical Engineer
The Ballard Group, Inc
2525 South Wadsworth Blvd, Suite 200
Lakewood, CO 80227
303.988.4514

Electrical Engineer
CMO Consulting Eng
11646 Sun Bear Trail
Golden, CO 80403
303.875.4037


City of Greeley
# Greeley Fire Station #2
2301 Reservoir Rd, Greeley, CO 80634


This drawing is an instrument of service and shall remain the property of Short Elliott Hendrickson, Inc. (SEH). This drawing, concepts and ideas contained herein shall not be used, reproduced, revised, or retained without the express written approval of SEH.

Submission or distribution of this drawing to meet official or regulatory requirements or for purposes in connection with the project is not be construed as publication in derogation of any of the rights of SEH.

COPYRIGHT © 2019
Short Elliott Hendrickson, Inc.
All Rights Reserved


| | |
|---|---|
| SEH Project | 150268 |
| Checked By | DK |
| Drawn By | EE/DK |

| Project Status | Issue Date |
|---|---|
| 30% DESIGN | 6/26/2019 |
| 75% DESIGN | 8/29/2019 |
| 100% DESIGN | 10/18/2019 |

Revision Issue

| Rev. # | Description | Date |
|---|---|---|
| 1 | Addendum #2 | 10/18/19 |

STEEL FRAMING DETAILS

S
530

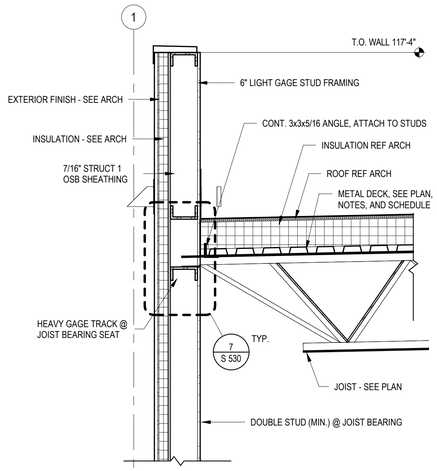


1 WALL SECTION @ JOIST
3/4" = 1'-0"

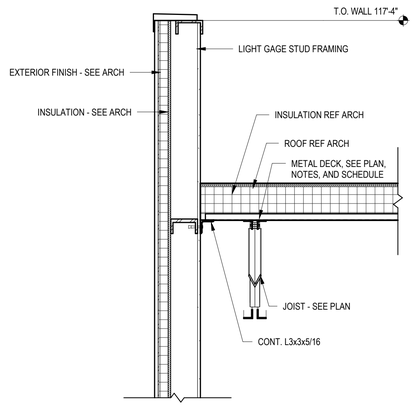


2 METAL STUD WALL SECTION
3/4" = 1'-0"

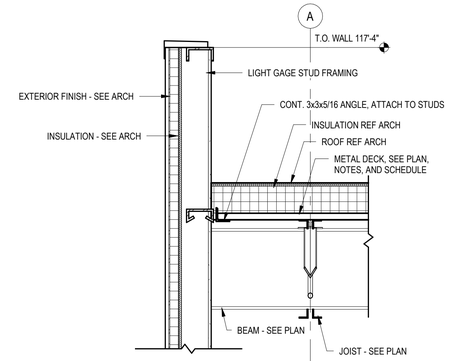


3 WALL SECTION @ BEAM
3/4" = 1'-0"

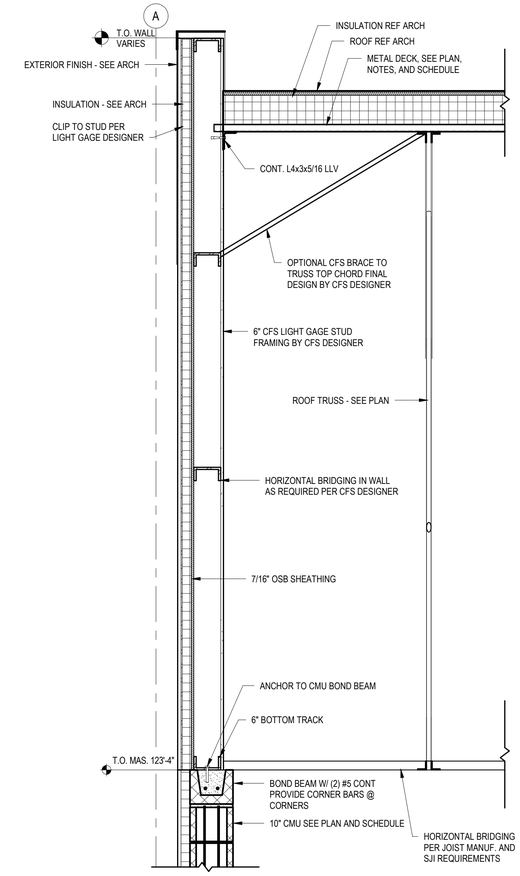


4 WALL SECTION @ TRUSS
3/4" = 1'-0"

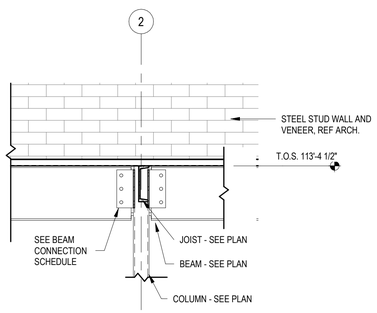


5 SECTION @ LOBBY ROOF
3/4" = 1'-0"

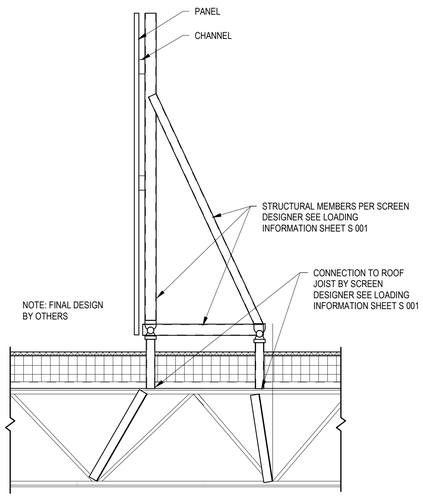


6 ROOF SCREEN CONNECTION
NOT TO SCALE

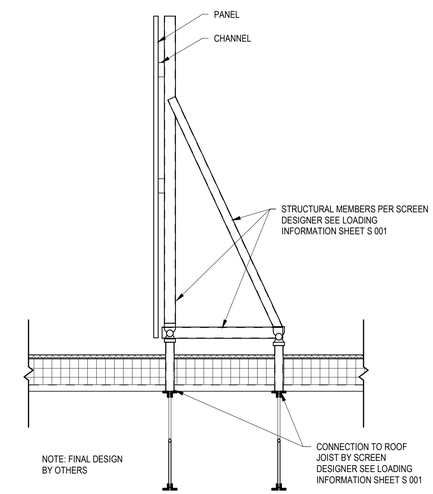


7 ROOF SCREEN CONNECTION
NOT TO SCALE

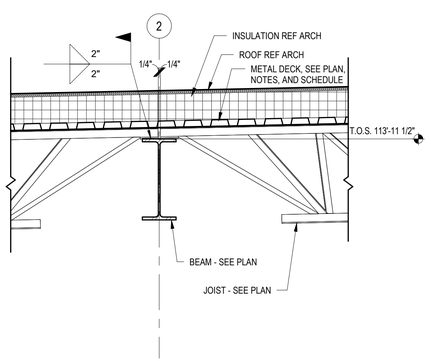


8 BEAM JOIST CONNECTION
3/4" = 1'-0"

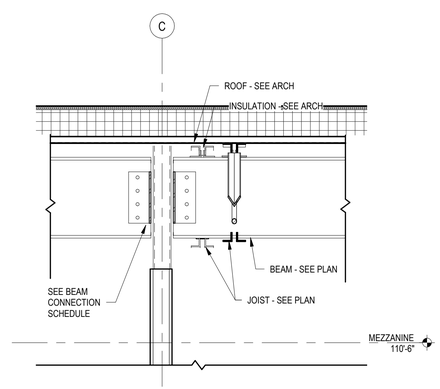


9 SECTION @ INTERIOR COLUMN
3/4" = 1'-0"

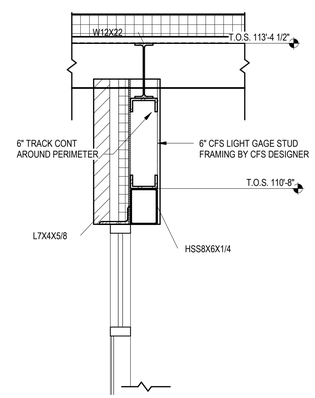


10 LOBBY HSS LINTEL DETAIL
3/4" = 1'-0"

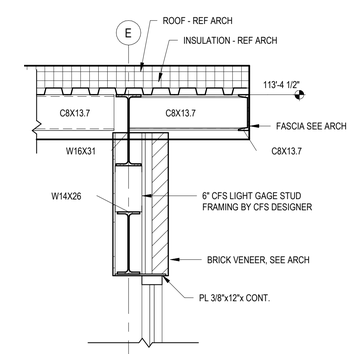


11 LOBBY LINTEL DETAIL
3/4" = 1'-0"

10/18/2019 9:55:48 AM

SEH

COLORADO LICENSED DAVID A. KRUSE 41222 PROFESSIONAL ENGINEER


Owner
City of Greeley
10th Street
Greeley, Colorado 80631
970.350.9777

Architect/ Civil Engineer/ Structural
Short Elliott Hendrickson, Inc.
2000 South Colorado Boulevard
Tower One, Suite 6000
Denver, Colorado 80222
720.540.6800

Landscape Architect
DHM Design
900 South Broadway
Denver, Colorado 80209
303.892.5566

Mechanical Engineer
The Ballard Group, Inc
2525 South Wadsworth Blvd, Suite 200
Lakewood, CO 80227
303.988.4514

Electrical Engineer
CMO Consulting Eng
11646 Sun Bear Trail
Golden, CO 80403
303.875.4037


City of Greeley
**Greeley Fire Station #2**
2301 Reservoir Rd, Greeley, CO 80634


This drawing is an instrument of service and shall remain the property of Short Elliott Hendrickson, Inc. (SEH). This drawing, concepts and ideas contained herein shall not be used, reproduced, revised, or retained without the express written approval of SEH.

Submission or distribution of this drawing to meet official or regulatory requirements or for purposes in connection with the project is not be construed as publication in derogation of any of the rights of SEH.

COPYRIGHT © 2019
Short Elliott Hendrickson, Inc.
All Rights Reserved


| | |
|---|---|
| **SEH Project** | 150268 |
| **Checked By** | DK |
| **Drawn By** | EE/DK |

| **Project Status** | **Issue Date** |
|---|---|
| 30% DESIGN | 6/26/2019 |
| 75% DESIGN | 8/29/2019 |
| 100% DESIGN | 10/18/2019 |

**Revision Issue**

| **Rev. #** | **Description** | **Date** |
|---|---|---|
| 1 | Addendum #2 | 10/18/19 |

STEEL FRAMING DETAILS

1

S
531

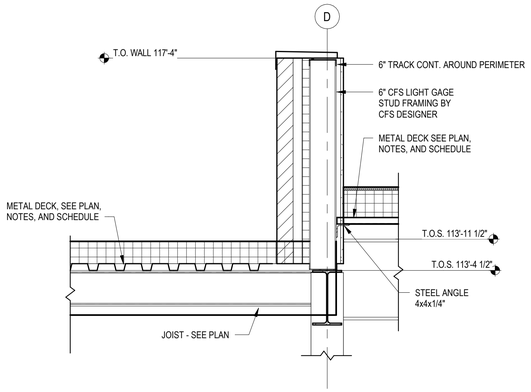


1 SECTION @ LOBBY AND LIVING QUARTERS
3/4" = 1'-0"

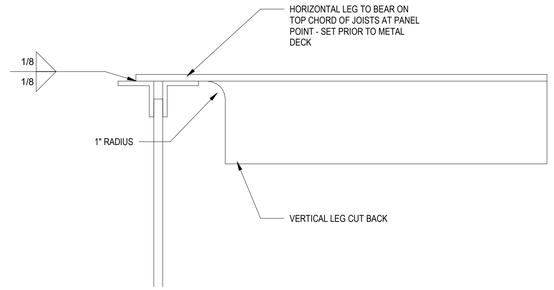


2 TYPICAL RTU SUPPORT ANGLE
NOT TO SCALE

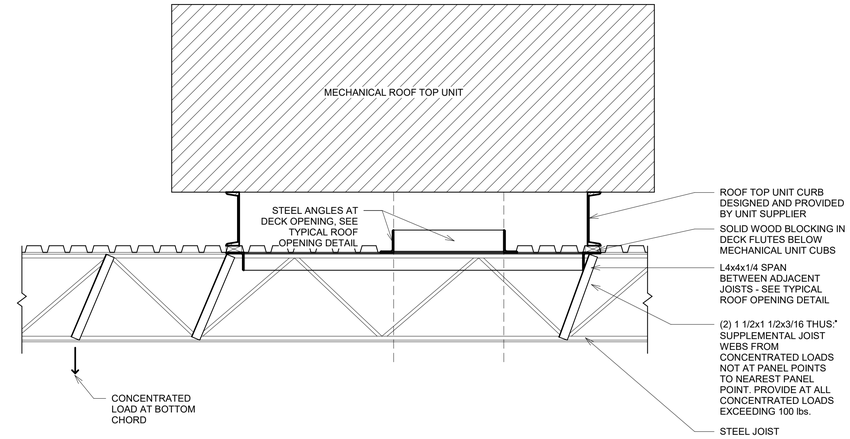


3 JOIST DETAIL AT CONCENTRATED LOADS
NOT TO SCALE

NOTE:
COORDINATE SIZE AND LOCATION OF ROOF OPENINGS WITH ACTUAL EQUIPMENT SELECTED. PROVIDE SUCH FRAMING FOR ALL ROOF OPENINGS EXCEEDING 12"x12".

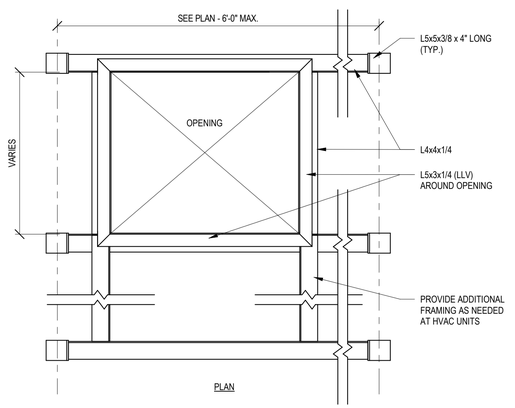


PLAN

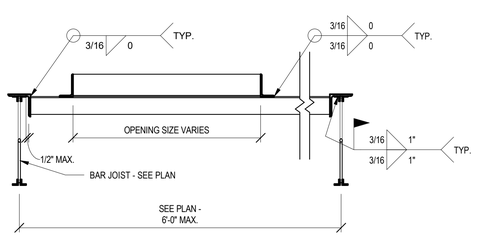


SECTION

4 TYPICAL ROOF OPENING DETAIL
NOT TO SCALE

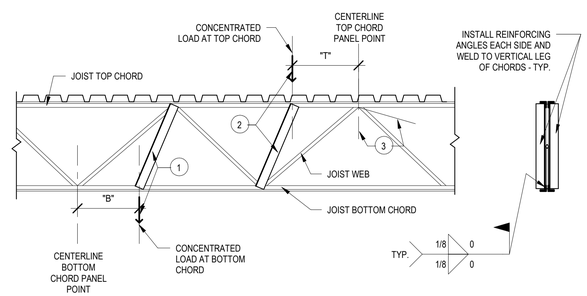


1 BOTTOM CHORD HANGING LOADS
WHERE "B" DIMENSION EXCEEDS 2", ADD REINFORCING ANGLES L2x2x3/16 EACH SIDE FROM POINT OF LOAD TO NEAREST JOIST TOP CHORD PANEL POINT.

2 TOP CHORD POINT LOADS
WHERE "T" DIMENSION EXCEEDS 2" ADD REINFORCING ANGLES L2x2x3/16 EACH SIDE FROM POINT OF LOAD TO NEAREST JOIST BOTTOM CHORD PANEL POINT.

3 WALL BRACING AND ANY OTHER LOADS WHICH MAY PRODUCE UPWARD FORCES MUST BE ATTACHED TO TOP CHORDS AT PANEL POINTS ONLY. WELD BRACES TO VERTICAL LEG OF TOP CHORD ONLY, INSTALL AT LIGHT SKEW TO MISS BOTTOM CHORD AS REQUIRED.

5 TYPICAL JOIST DETAIL AT CONCENTRATED LOADS
NOT TO SCALE

10/18/2019 9:55:48 AM

SEH

COLORADO LICENSED
DAVID A. KRETT
10/18/19
41222
PROFESSIONAL ENGINEER


Owner
City of Greeley
10th Street
Greeley, Colorado 80631
970.350.9777

Architect/ Civil Engineer/ Structural
Short Elliott Hendrickson, Inc.
2000 South Colorado Boulevard
Tower One, Suite 6000
Denver, Colorado 80222
720.540.6800

Landscape Architect
DHM Design
900 South Broadway
Denver, Colorado 80209
303.892.5566

Mechanical Engineer
The Ballard Group, Inc
2525 South Wadsworth Blvd, Suite 200
Lakewood, CO 80227
303.988.4514

Electrical Engineer
CMO Consulting Eng
11646 Sun Bear Trail
Golden, CO 80403
303.875.4037


City of Greeley
**Greeley Fire Station #2**
2301 Reservoir Rd, Greeley, CO 80634


This drawing is an instrument of service and shall remain the property of Short Elliott Hendrickson, Inc. (SEH). This drawing, concepts and ideas contained herein shall not be used, reproduced, revised, or retained without the express written approval of SEH.

Submission or distribution of this drawing to meet official or regulatory requirements or for purposes in connection with the project is not be construed as publication in derogation of any of the rights of SEH.

COPYRIGHT © 2019
Short Elliott Hendrickson, Inc.
All Rights Reserved


| | |
|---|---|
| **SEH Project** | 150268 |
| **Checked By** | DK |
| **Drawn By** | EE/DK |

| **Project Status** | **Issue Date** |
|---|---|
| 30% DESIGN | 6/26/2019 |
| 75% DESIGN | 8/29/2019 |
| 100% DESIGN | 10/18/2019 |

**Revision Issue**

| **Rev. #** | **Description** | **Date** |
|---|---|---|
| 1 | Addendum #2 | 10/18/19 |

STEEL FRAMING DETAILS

S
532

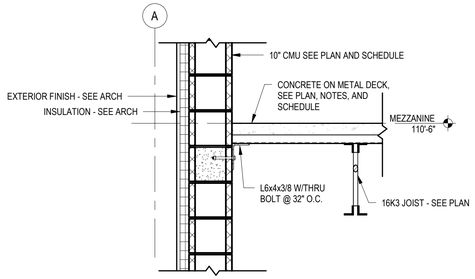


1 MASONRY SECTION @ MEZZANINE
3/4" = 1'-0"

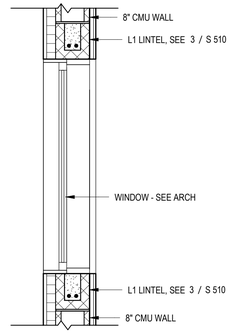


2 MASONRY SECTION @ WINDOW
3/4" = 1'-0"

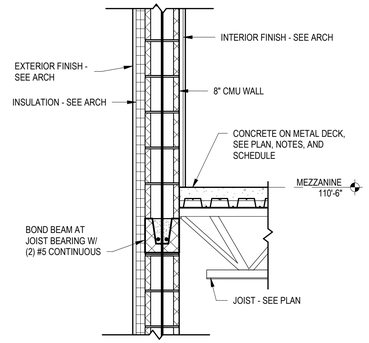


3 MASONRY SECTION @ MEZZANINE JOIST
3/4" = 1'-0"

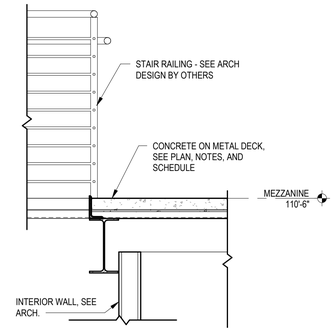


4 MASONRY SECTION @ STAIRS
3/4" = 1'-0"

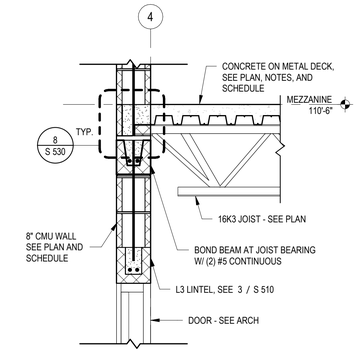


5 MASONRY SECTION @ INTERIOR MEZZANINE
3/4" = 1'-0"

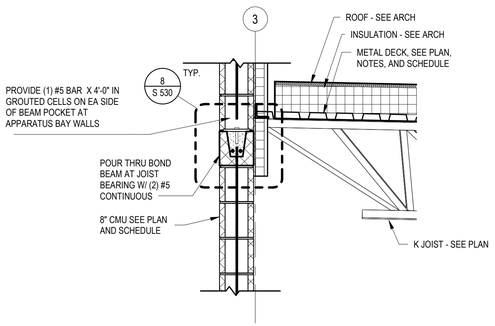


6 MASONRY SECTION @ APPARATUS BAY
3/4" = 1'-0"

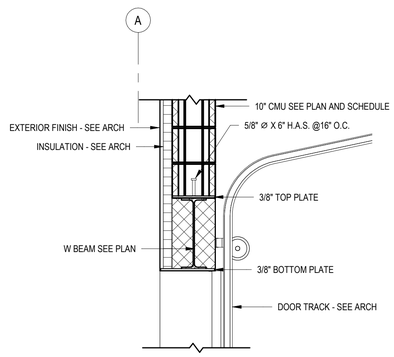


7 MASONRY SECTION @ GARAGE DOOR
3/4" = 1'-0"

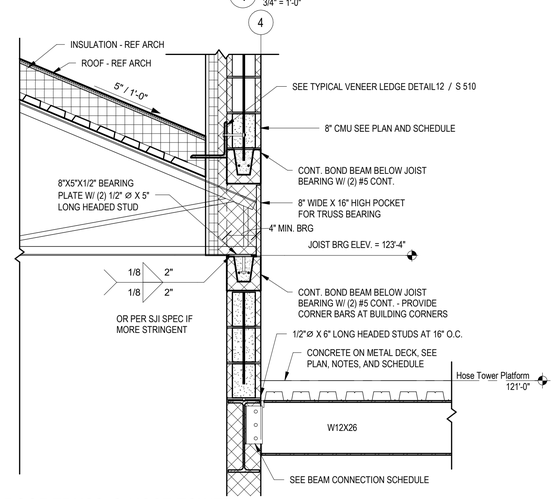


8 ROOF TRUSS @ HOSE TOWER
3/4" = 1'-0"

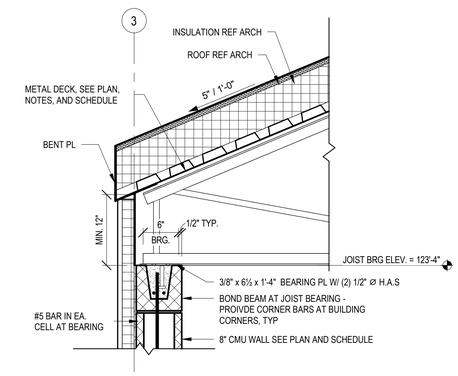


9 ROOF TRUSS BEARING DETAIL
1" = 1'-0"

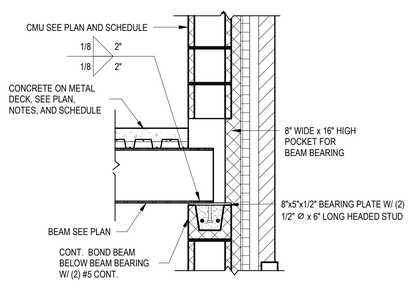


10 BEAM POCKET DETAIL
3/4" = 1'-0"

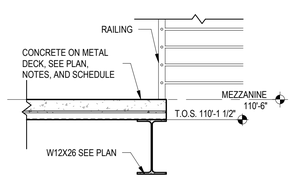


11 MASONRY SECTION @ STAIR LANDING
3/4" = 1'-0"

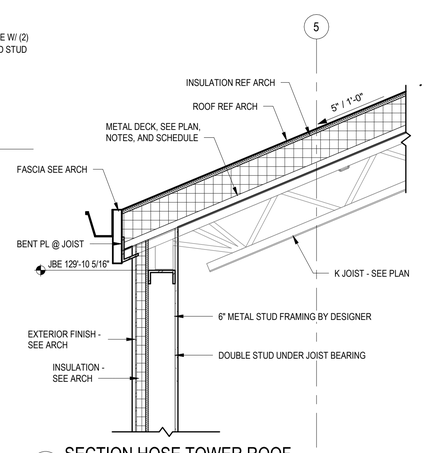


12 SECTION HOSE TOWER ROOF
3/4" = 1'-0"

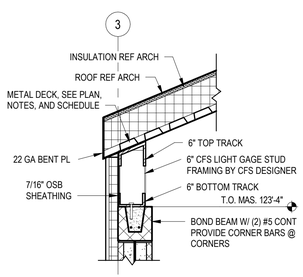


13 SECTION @ APPARATUS ROOF
3/4" = 1'-0"

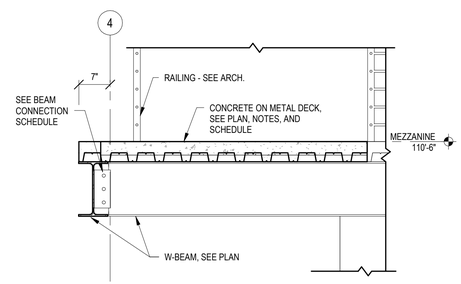


14 SECTIOIN @ MEZZANINE AND APPARATUS BAY
3/4" = 1'-0"

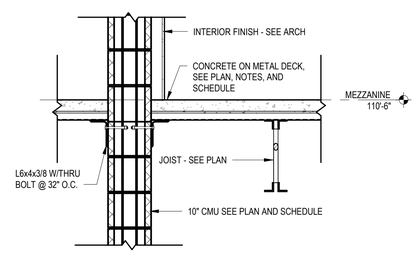


16 SECTION @ MEZZANINE AND HOSE TOWER
3/4" = 1'-0"

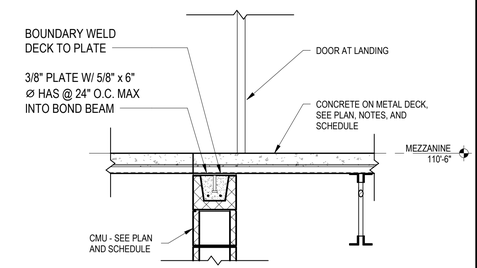


15 SECTION METAL DECK OVER WALL
3/4" = 1'-0"

10/18/2019 9:55:50 AM

SEH

COLORADO LICENSED
DAVID A. KNOTT
6/17/19
41222
PROFESSIONAL ENGINEER


Owner
City of Greeley
10th Street
Greeley, Colorado 80631
970.350.9777

Architect/ Civil Engineer/ Structural
Short Elliott Hendrickson, Inc.
2000 South Colorado Boulevard
Tower One, Suite 6000
Denver, Colorado 80222
720.540.6800

Landscape Architect
900 South Broadway
Denver, Colorado 80209
303.892.5666

Mechanical Engineer
The Ballard Group, Inc
2525 South Wadsworth Blvd, Suite 200
Lakewood, CO 80227
303.988.4514

Electrical Engineer
CMO Consulting Eng
11646 Sun Bear Trail
Golden, CO 80403
303.875.4037


City of Greeley
# Greeley Fire Station #2
2301 Reservoir Rd, Greeley, CO 80634


This drawing is an instrument of service and shall remain the property of Short Elliott Hendrickson, Inc. (SEH). This drawing, concepts and ideas contained herein shall not be used, reproduced, revised, or retained without the express written approval of SEH.

Submission or distribution of this drawing to meet official or regulatory requirements or for purposes in connection with the project is not be construed as publication in derogation of any of the rights of SEH.

COPYRIGHT © 2019
Short Elliott Hendrickson, Inc.
All Rights Reserved


| | |
|---|---|
| **SEH Project** | 150268 |
| **Checked By** | DK |
| **Drawn By** | EE/DK |

| Project Status | Issue Date |
|---|---|
| 30% DESIGN | 6/26/2019 |
| 75% DESIGN | 8/29/2019 |
| 100% DESIGN | 10/18/2019 |

**Revision Issue**

| Rev. # | Description | Date |
|---|---|---|
| 1 | Addendum #2 | 10/18/19 |

STEEL FRAMING DETAILS

S
533

| BAR SIZE | MIN BAR SPACING (INCH) | DEVELOPMENT LENGTH $f'_c$ (PSI) | COMPRESSION LAP SPLICE (LCS) | TENSION LAP SPLICE (LTS) $f'_c$ (PSI) |
|---|---|---|---|---|
| | | 4500 | | 4500 |
| #3 | 1.875 | 14 | 12 | 18 |
| #4 | 2.000 | 18 | 15 | 24 |
| #5 | 2.125 | 23 | 19 | 30 |
| #6 | 2.250 | 27 | 23 | 35 |
| #7 | 2.375 | 40 | 27 | 51 |
| #8 | 2.500 | 45 | 30 | 59 |
| #9 | 2.875 | 51 | 34 | 66 |
| #10 | 3.250 | 57 | 39 | 74 |
| #11 | 3.625 | 64 | 43 | 82 |

**NOTES:**

1. TABULATED VALUES ARE PER ACI 318-14 REQUIREMENTS FOR NORMAL WEIGHT CONCRETE. THE VALUES ON THIS SHEET DO NOT APPLY TO LIGHTWEIGHT CONCRETE
2. SEE TYPICAL DETAILS FOR CONCRETE COVER
3. MINIMUM BAR SPACING IS MEASURED CENTER TO CENTER OF BAR
4. WHERE ACTUAL CONDITIONS DIFFER FROM THE CLEAR COVER SHOWN ON THE TYPICAL DETAILS OR DIFFER FROM PROVIDED SCHEDULED BAR SIZE, MINIMUM SPACING AND/OR f'c, LENGTHS SHALL BE ADJUSTED ONLY WITH THE APPROVAL OF THE STRUCTURAL ENGINEER OF RECORD
5. TABULATED VALUES ARE FOR NON-EPOXY COATED REINFORCEMENT. FOR EPOXY COATED REINFORCEMENT MULTIPLY VALUES BY 1.3 FOR "TOP BARS" AND 1.5 FOR ALL OTHER REINFORCEMENT
6. WHERE BARS OF DIFFERENT SIZES ARE LAP SPLICED IN TENSION, THE LAP LENGTH SHALL BE THE LAP SPLICE LENGTH (LTS) OF THE SMALLER BAR
7. WHERE BARS OF DIFFERENT SIZES ARE LAP SPLICED IN COMPRESSION, THE COMPRESSION LAP LENGTH (LCS) SHALL BE THE COMPRESSION LAP SPLICE LENGTH (LCS) OF THE SMALLER BAR
8. "TOP BARS" ARE DEFINED PER ACI AS HORIZONTAL REINFORCEMENT SO PLACED THAT MORE THAN 12" OF FRESH CONCRETE IS CAST IN THE MEMBER BELOW THE DEVELOPMENT LENGTH OR SPLICE. "OTHER BARS" ARE ALL BARS FOR WHICH THIS DOES NOT APPLY
9. FOUNDATION WALL LAP SPLICES ARE BASED ON A MINIMUM 2 INCH CLEAR COVER. IF CLEAR COVER IS REDUCED ON INTERIOR FACE, LAP SPLICES MUST BE REVISED

## 1 CONCRETE LAP SPLICE SCHEDULE
NOT TO SCALE

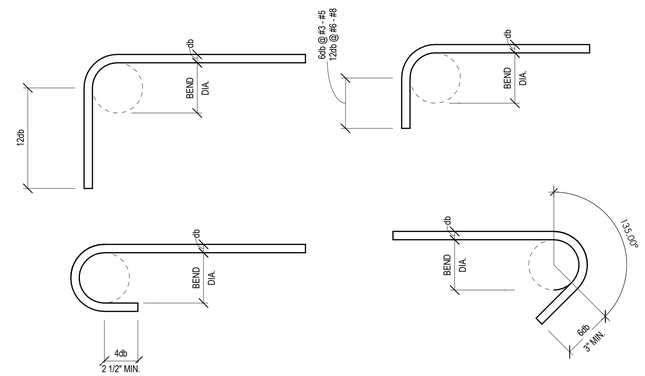


PRIMARY REINFORCEMENT

| BAR SIZE | MINIMUM FINISHED BEND DIAMETER (d) |
|---|---|
| #3 - #8 | 6db |
| #9 - #11 | 8db |
| #14 & #18 | 10db |

STIRRUPS & TIES

| BAR SIZE | MINIMUM FINISHED BEND DIAMETER (d) |
|---|---|
| #3 - #5 | 4db |
| #6 - #8 | 6db |

## 2 STANDARD HOOK DETAILS
NOT TO SCALE

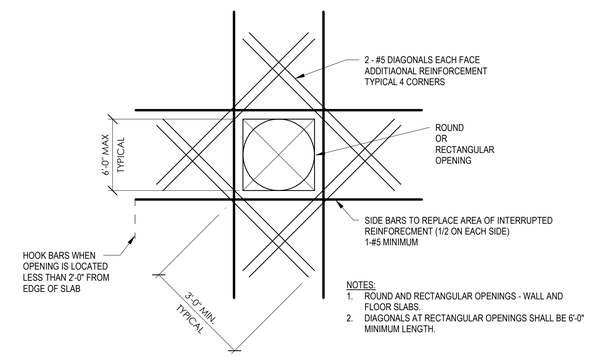


NOTES:
1. ROUND AND RECTANGULAR OPENINGS - WALL AND FLOOR SLABS.
2. DIAGONALS AT RECTANGULAR OPENINGS SHALL BE 6'-0" MINIMUM LENGTH.

## 3 OPENING REINFORCEMENT DETAIL
NOT TO SCALE

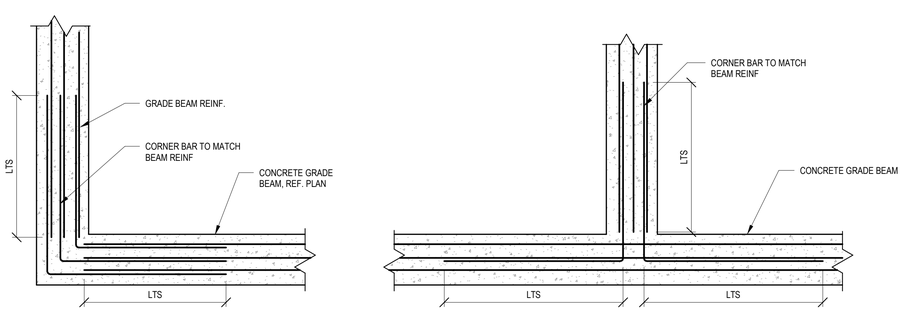


## 4 GRADE BEAM/FND WALL CORNER REINF
NOT TO SCALE

| MINIMUM LAP SPLICE LENGTH , IN. | | | | |
|---|---|---|---|---|
| LONG. BAR SIZE | 6-IN. CMU | 8-IN. CMU | 10-IN. CMU | 12-IN. CMU |
| | UNCONFINED | UNCONFINED | UNCONFINED | UNCONFINED |
| #3 | 12 | 12 | 12 | 12 |
| #4 | 14 | 14 | 12 | 12 |
| #5 | 20 | 20 | 15 | 13 |
| #6 | 38 | 38 | 38 | 38 |
| #7 | 52 | 52 | 52 | 52 |
| #8 | NP | 78 | 78 | 78 |
| #9 | NP | NP | 81 | 81 |

**NOTES:**

1. APPLICABLE FOR REINFORCEMENT IN CENTER OF WALL AND $f'_m$ = 2,500 PSI
2. NP = NOT PERMITTED.

## 5 MASONRY LAP SPLICE SCHEDULE
NOT TO SCALE

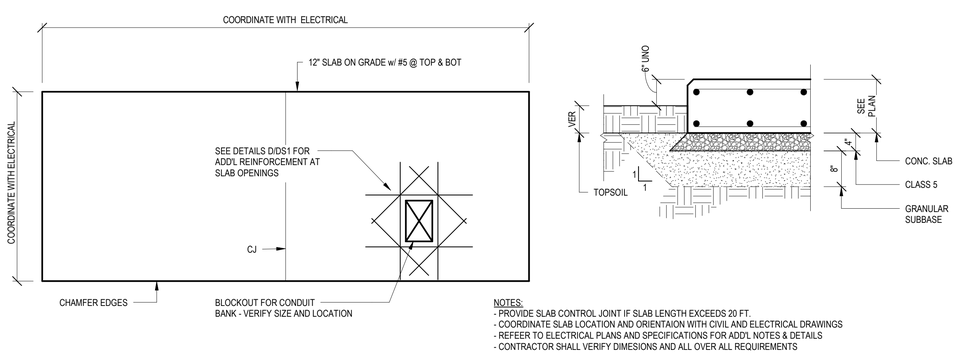


NOTES:
- PROVIDE SLAB CONTROL JOINT IF SLAB LENGTH EXCEEDS 20 FT.
- COORDINATE SLAB LOCATION AND ORIENTAION WITH CIVIL AND ELECTRICAL DRAWINGS
- REFEER TO ELECTRICAL PLANS AND SPECIFICATIONS FOR ADD'L NOTES & DETAILS
- CONTRACTOR SHALL VERIFY DIMESIONS AND ALL OVER ALL REQUIREMENTS

## 6 GENERATOR STRUCTURAL SLAB DETAIL
NOT TO SCALE

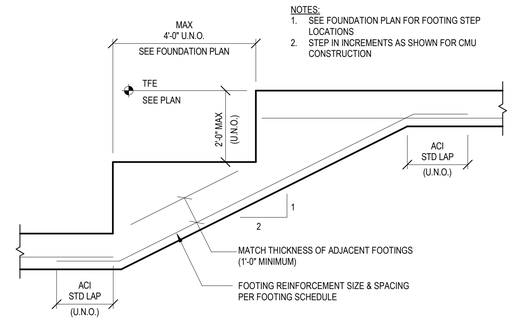


NOTES:
1. SEE FOUNDATION PLAN FOR FOOTING STEP LOCATIONS
2. STEP IN INCREMENTS AS SHOWN FOR CMU CONSTRUCTION

## 7 STEPPED FOOTING DETAIL
NOT TO SCALE

10/18/2019 9:55:50 AM

SEH

COLORADO LICENSED
DAVID A. KRELL
41222
PROFESSIONAL ENGINEER


Owner
City of Greeley
10th Street
Greeley, Colorado 80631
970.350.9777

Architect/ Civil Engineer/ Structural
Short Elliott Hendrickson, Inc.
2000 South Colorado Boulevard
Tower One, Suite 6000
Denver, Colorado 80222
720.540.6800

Landscape Architect
DHM Design
900 South Broadway
Denver, Colorado 80209
303.892.5566

Mechanical Engineer
The Ballard Group, Inc
2525 South Wadsworth Blvd, Suite 200
Lakewood, CO 80227
303.988.4514

Electrical Engineer
CMO Consulting Eng
11646 Sun Bear Trail
Golden, CO 80403
303.875.4037


City of Greeley
**Greeley Fire Station #2**
2301 Reservoir Rd, Greeley, CO 80634


This drawing is an instrument of service and shall remain the property of Short Elliott Hendrickson, Inc. (SEH). This drawing, concepts and ideas contained herein shall not be used, reproduced, revised, or retained without the express written approval of SEH.

Submission or distribution of this drawing to meet official or regulatory requirements or for purposes in connection with the project is not be construed as publication in derogation of any of the rights of SEH.

COPYRIGHT © 2019
Short Elliott Hendrickson, Inc.
All Rights Reserved


| | |
|---|---|
| **SEH Project** | 150268 |
| **Checked By** | DK |
| **Drawn By** | EE/DK |

| Project Status | Issue Date |
|---|---|
| 30% DESIGN | 6/26/2019 |
| 75% DESIGN | 8/29/2019 |
| 100% DESIGN | 10/18/2019 |

**Revision Issue**

| Rev. # | Description | Date |
|---|---|---|
| 1 | Addendum #2 | 10/18/19 |

TYPICAL REINFORCING DETAILS

S
540

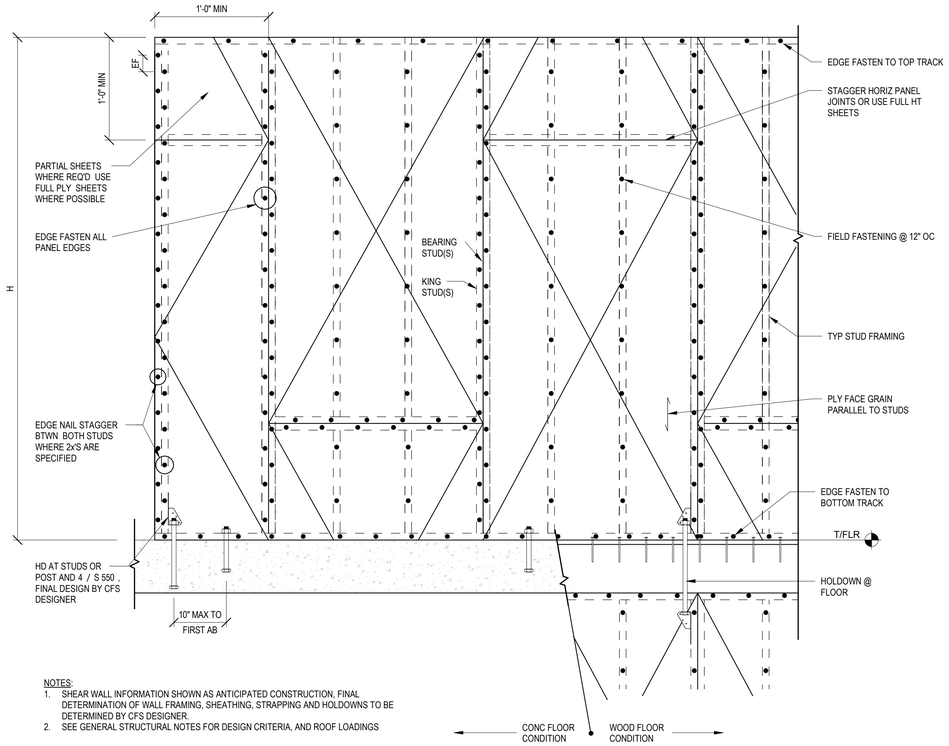


NOTES:
1. SHEAR WALL INFORMATION SHOWN AS ANTICIPATED CONSTRUCTION. FINAL DETERMINATION OF WALL FRAMING, SHEATHING, STRAPPING AND HOLDOWNS TO BE DETERMINED BY CFS DESIGNER.
2. SEE GENERAL STRUCTURAL NOTES FOR DESIGN CRITERIA, AND ROOF LOADINGS

## 1 SHEAR WALL ELEVATION
NOT TO SCALE

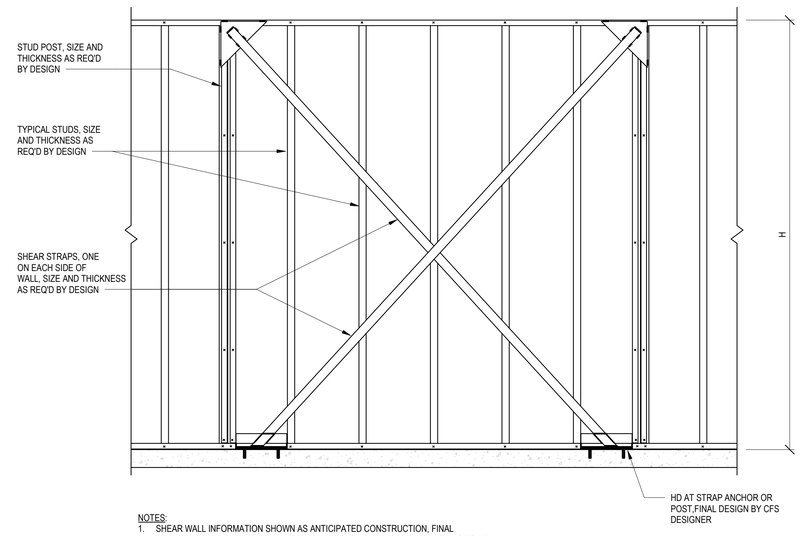


NOTES:
1. SHEAR WALL INFORMATION SHOWN AS ANTICIPATED CONSTRUCTION. FINAL DETERMINATION OF WALL FRAMING, SHEATHING, STRAPPING AND HOLDOWNS TO BE DETERMINED BY CFS DESIGNER.
2. SEE GENERAL STRUCTURAL NOTES FOR DESIGN CRITERIA, AND ROOF LOADINGS
3. TOP TRACK MUST BE CONTINUOUS AT X-BRACING (SPLICING IS NOT PERMITTED)

## 2 SHEAR WALL ELEVATION - X-STRAPPED
NOT TO SCALE

| SHEAR WALL SCHEDULE | | | | | | |
|---|---|---|---|---|---|---|
| | | DETAIL CONDITION | | | | |
| | | (A) | | | (B) | |
| SHEAR WALL SYMBOL | SHEATHING | ANCHOR BOLT | BOTTOM TRACK | HOLDOWN (BY CFS) | TOP TRACK | SHEAR CLIP (BY CFS) |
| 1 | 7/16" OSB W/ #8 SCREWS @ 4" OC AT PANEL EDGE | 5/8" DIA @ 4'-0" OC (9" EMBED) | MATCH WALL WITDH 16 ga MIN. | SIMPSON S/HDU6 | MATCH WALL WITDH 16 ga MIN. | -- |
| 2 | X-BRACE W/ STRAPS E.F. OF WALL | 5/8" DIA @ 4'-0" OC (9" EMBED) | MATCH WALL WITDH 16 ga MIN. | SIMPSON S/HDU9 | MATCH WALL WITDH 16 ga MIN. | -- |

NOTES:
1. FINAL CONFIGURATION OF SHEAR WALL, SHEATHING, STRAPPING, AND HOLDOWNS TO BE DETERMINED BY COLD FORMED DESIGNER.
2. OSB ON ONE SIDE UNO
3. FOLLOW ALL MANUFACTURER'S GUIDELINES NECESSARY TO ACHIEVE FULL ICC DESIGN VALUES
4. TOP TRACK TO BE CONTINUOUS FOR LENGTH OF WALL UNO
5. PROVIDE FRAMING MEMBERS AT ALL PLYWOOD ADJOINING PANEL EDGES.
6. SEE DETAIL 1 / S 550 , AND 2 / S 550 FOR TYPICAL SHEAR WALL FRAMING ELEVATION
7. SEE PLAN AND DETAIL 4 / S 550 FOR SHEAR WALL HOLDOWNS

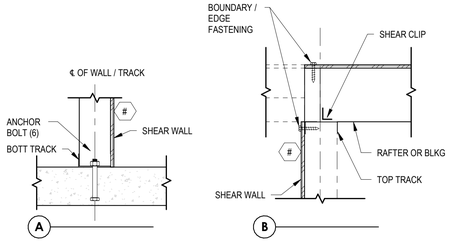


## 3 SHEAR WALL SCHEDULE
NOT TO SCALE

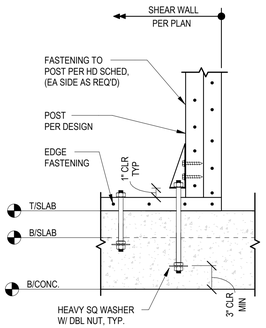


**A SINGLE HOLDOWN AT END OF WALL OR AT DOOR OPNG**

| HOLDOWN (1)(2)(3) | MIN POST SIZE UNO | MIN ANCHOR ROD DIA | MIN ANCHOR ROD EMBED |
|---|---|---|---|
| S/HDU4 | 2x SW | 5/8" | 9" |
| S/HDU6 | 2x SW | 5/8" | 9" |
| S/HDU9 | 2x SW | 7/8" | 12" |
| S/HDU11 | 2x SW | 7/8" | 12" |

SW = STUD WIDTH

**NOTE:**
1. FINAL DESIGN OF HOLDOWNS AND LOCATIONS PER COLD FORMED STEEL DESIGNER.
2. FOLLOW ALL MANUFACTURER'S GUIDELINES NECESSARY TO ACHIEVE FULL ICC DESIGN VALUES.
3. AT MULTIPLE HOLDOWN POST CONDITION, INTER CONNECT STUDS W/ STAGGERED FASTENERS PER AISI REQUIREMENTS.
4. FOR DOUBLE HOLDOWN POST AT CORNER WALL PROVIDE A SOLID POST IN LIEU OF MULTIPLE STUD POST.

## 4 SHEAR WALL HOLDOWNS INTO FOUNDATION
NOT TO SCALE

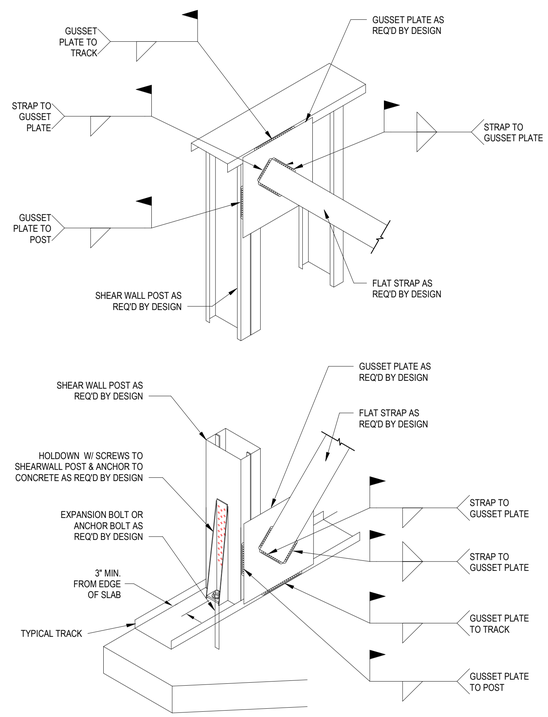


## 5 STRAPPED GUSSET PLATES
NOT TO SCALE

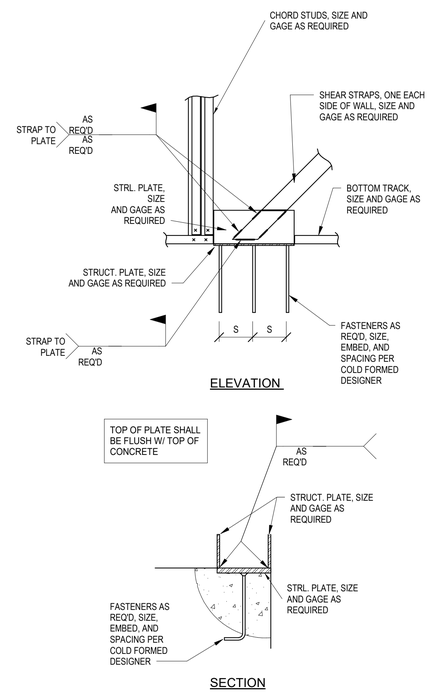


## 6 STRAPPED ANCHOR OPTION
NOT TO SCALE

10/18/2019 9:55:51 AM

SEH

COLORADO LICENSED DAVID A. KRUT 41222 PROFESSIONAL ENGINEER


Owner
City of Greeley
10th Street
Greeley, Colorado 80631
970.350.9777

Architect/ Civil Engineer/ Structural
Short Elliott Hendrickson, Inc.
2000 South Colorado Boulevard
Tower One, Suite 6000
Denver, Colorado 80222
720.540.6800

Landscape Architect
DHM Design
900 South Broadway
Denver, Colorado 80209
303.892.5566

Mechanical Engineer
The Ballard Group, Inc
2525 South Wadsworth Blvd, Suite 200
Lakewood, CO 80227
303.988.4514

Electrical Engineer
CMO Consulting Eng
11646 Sun Bear Trail
Golden, CO 80403
303.875.4037


City of Greeley
**Greeley Fire Station #2**
2301 Reservoir Rd, Greeley, CO 80634


This drawing is an instrument of service and shall remain the property of Short Elliott Hendrickson, Inc. (SEH). This drawing, concepts and ideas contained herein shall not be used, reproduced, revised, or retained without the express written approval of SEH.

Submission or distribution of this drawing to meet official or regulatory requirements or for purposes in connection with the project is not be construed as publication in derogation of any of the rights of SEH.

COPYRIGHT © 2019
Short Elliott Hendrickson, Inc.
All Rights Reserved


| | |
|---|---|
| **SEH Project** | 150268 |
| **Checked By** | DK |
| **Drawn By** | EE/DK |

| Project Status | Issue Date |
|---|---|
| 30% DESIGN | 6/26/2019 |
| 75% DESIGN | 8/29/2019 |
| 100% DESIGN | 10/18/2019 |

**Revision Issue**

| Rev. # | Description | Date |
|---|---|---|
| 1 | Addendum #2 | 10/18/19 |

SHEAR WALL DETAILS

S
550

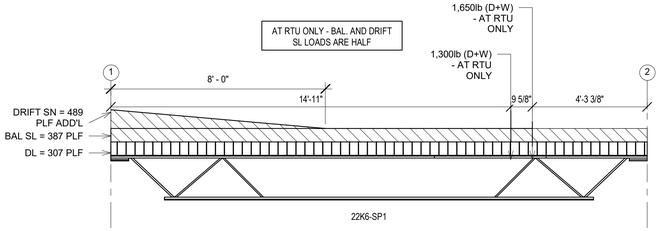


1 JOIST LOAD DIAGRAM - 22K-SP1
3/8" = 1'-0"

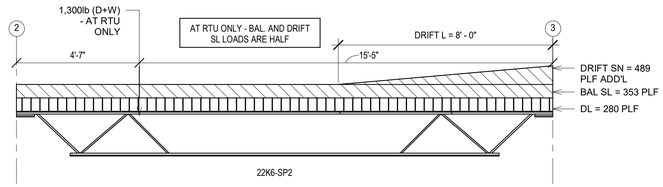


2 JOIST LOAD DIAGRAM - 22K-SP2
3/8" = 1'-0"

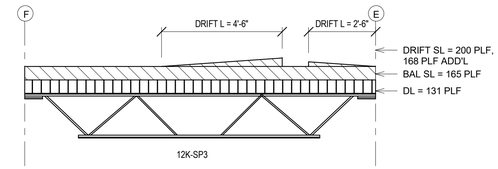


3 JOIST LOAD DIAGRAM - 12K-SP3
3/8" = 1'-0"

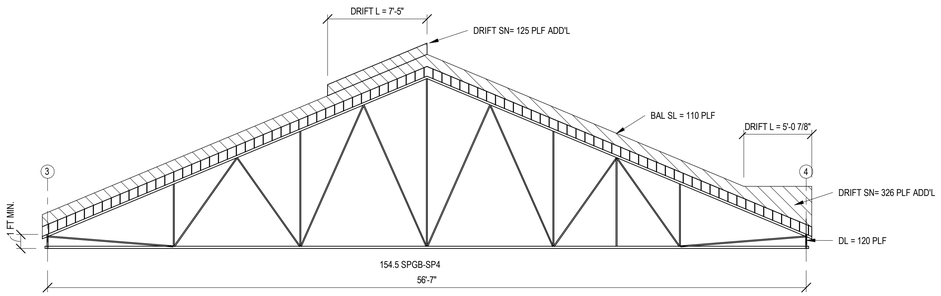


4 JOIST LOAD DIAGRAM - 154.5 SPGB-SP4
3/16" = 1'-0"

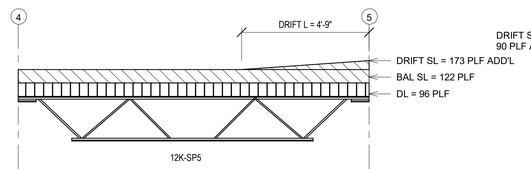


5 JOIST LOAD DIAGRAM - 12K-SP5
NOT TO SCALE

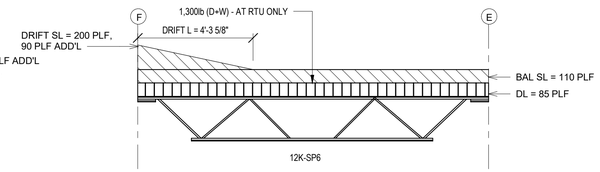


6 JOIST LOAD DIAGRAM - 12K-SP5 W/RTU
NOT TO SCALE

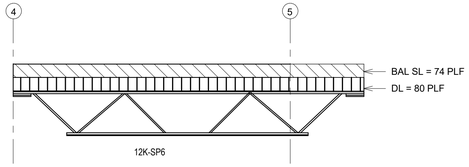


7 JOIST LOAD DIAGRAM - 12K-SP6
3/8" = 1'-0"

10/18/2019 9:55:51 AM

SEH

COLORADO LICENSED
DAVID A. KAPELL
REVISIVE
41222
PROFESSIONAL ENGINEER


Owner
City of Greeley
10th Street
Greeley, Colorado 80631
970.350.9777

Architect/ Civil Engineer/ Structural
Short Elliott Hendrickson, Inc.
2000 South Colorado Boulevard
Tower One, Suite 6000
Denver, Colorado 80222
720.540.6800

Landscape Architect

900 South Broadway
Denver, Colorado 80209
303.892.5566

Mechanical Engineer
The Ballard Group, Inc
2525 South Wadsworth Blvd, Suite 200
Lakewood, CO 80227
303.988.4514

Electrical Engineer
CMO Consulting Eng
11646 Sun Bear Trail
Golden, CO 80403
303.875.4037


City of Greeley
**Greeley Fire Station #2**
2301 Reservoir Rd, Greeley, CO 80634


This drawing is an instrument of service and shall remain the property of Short Elliott Hendrickson, Inc. (SEH). This drawing, concepts and ideas contained herein shall not be used, reproduced, revised, or retained without the express written approval of SEH.

Submission or distribution of this drawing to meet official or regulatory requirements or for purposes in connection with the project is not be construed as publication in derogation of any of the rights of SEH.

COPYRIGHT © 2019
Short Elliott Hendrickson, Inc.
All Rights Reserved


| | |
|---|---|
| **SEH Project** | 150268 |
| **Checked By** | DK |
| **Drawn By** | EE/DK |

| Project Status | Issue Date |
|---|---|
| 30% DESIGN | 6/26/2019 |
| 75% DESIGN | 8/29/2019 |
| 100% DESIGN | 10/18/2019 |

**Revision Issue**

| Rev. # | Description | Date |
|---|---|---|
| 1 | Addendum #2 | 10/18/19 |

STEEL JOIST LOAD DIAGRAM

S
560