GENERAL DESCRIPTION

A FULLY AUTOMATED SPRINKLER IRRIGATION SYSTEM USING POP-UP ROTORS IRRIGATES TURF AREAS. EXISTING DRIP IRRIGATION WILL BE PUT ON THE NEW CONTROL SYSTEM AND NEEDS TO REMAIN FULLY OPERATIONAL. THESE LOCATIONS HAVE BEEN IDENTIFIED ON THE PLANS.

NON-POTABLE WATER IS USED FOR IRRIGATION. THE POINT-OF-CONNECTION (P.O.C.) IS SHOWN ON THE PLANS DOWNSTREAM OF THE IRRIGATION PUMP STATION.

A WALL MOUNT IRRIGATION CONTROLLER USING A DECODER SYSTEM WITH TWO-WIRE A CABLE PATH MUST BE INSTALLED UNDER THIS CONTRACT.

A RAIN SENSOR IS USED TO PAUSE IRRIGATION AT A SPECIFIED RAINFALL THRESHOLD. A FLOW SENSOR AND MASTER VALVE ARE TO BE INSTALLED TO SHUT DOWN THE IRRIGATION SYSTEM IN THE EVENT OF A PIPE BREAK.

ISOLATION GATE VALVES ARE PROVIDED TO ISOLATE SECTIONS OF THE SYSTEM FOR REPAIRS OR MAINTENANCE. QUICK COUPLING VALVES HAVE BEEN PROVIDED THROUGHOUT THE SITE FOR INCIDENTAL WATERING.

GENERAL NOTES

1. THE SYSTEM DESIGN ASSUMES A MINIMUM STATIC PRESSURE AND MAXIMUM FLOW DEMAND AS SHOWN ON THE PLANS FOR THE POINT-OF-CONNECTION (P.O.C.). THE CONTRACTOR IS RESPONSIBLE FOR VERIFYING PRESSURE AND FLOW ON SITE PRIOR TO CONSTRUCTION AND REPORT ANY DISCREPANCIES TO THE OWNER'S REPRESENTATIVE.
2. READ THOROUGHLY AND BECOME FAMILIAR WITH THE SPECIFICATIONS AND INSTALLATION DETAILS FOR THIS AND RELATED WORK PRIOR TO CONSTRUCTION.
3. COORDINATE UTILITY LOCATES ("CALL BEFORE YOU DIG") OF UNDERGROUND UTILITIES PRIOR TO CONSTRUCTION.
4. DO NOT PROCEED WITH THE INSTALLATION OF THE IRRIGATION SYSTEM WHEN IT IS OBVIOUS IN THE FIELD THAT OBSTRUCTIONS OR GRADE DIFFERENCES EXIST THAT MIGHT NOT HAVE BEEN CONSIDERED IN THE ENGINEERING, OR IF DISCREPANCIES IN CONSTRUCTION DETAILS, LEGEND, NOTES, OR SPECIFICATIONS ARE DISCOVERED. BRING ALL SUCH OBSTRUCTIONS OR DISCREPANCIES TO THE ATTENTION OF THE OWNER'S REPRESENTATIVE.
5. THE DRAWINGS ARE DIAGRAMMATIC. THEREFORE, THE FOLLOWING SHOULD BE NOTED:

   A. IRRIGATION COMPONENTS MAY BE SHOWN OUTSIDE PLANTING AREAS FOR CLARITY. AVOID CONFLICTS BETWEEN THE IRRIGATION SYSTEM, PLANTING MATERIALS, AND ARCHITECTURAL FEATURES. INSTALL IRRIGATION PIPE AND WIRING IN LANDSCAPED AREAS WHEREVER POSSIBLE.

   B. USE ONLY STANDARD TEES AND ELBOW FITTINGS. USE OF CROSS TYPE FITTINGS IS NOT PERMITTED.
6. PROVIDE THE FOLLOWING COMPONENTS TO THE OWNER PRIOR TO THE COMPLETION OF THE PROJECT:

   A. TWO OPERATING KEYS FOR EACH TYPE OF MANUALLY OPERATED VALVE.

   B. TWO OF EACH SERVICING WRENCH OR TOOL NEEDED FOR COMPLETE ACCESS, ADJUSTMENT, AND REPAIR OF ALL ROTARY SPRINKLERS.
7. SELECT NOZZLES FOR SPRINKLERS WITH ARCS WHICH PROVIDE COMPLETE AND UNIFORM COVERAGE WITH MINIMUM OVERSPRAY FOR THE SITE CONDITIONS. CAREFULLY ADJUST THE RADIUS OF THROW AND ARC OF EACH SPRINKLER TO PROVIDE THE BEST PERFORMANCE.
8. THE IRRIGATION CONTRACTOR IS RESPONSIBLE FOR THE INSTALLATION OF IRRIGATION SLEEVING. SLEEVES ARE TO BE INSTALLED FOR BOTH PIPING AND ELECTRICAL WIRING AT EACH HARDSCAPE CROSSING. COORDINATE INSTALLATION OF SLEEVING WITH OTHER TRADES. ANY PIPE OR WIRE WHICH PASSES BENEATH EXISTING HARDSCAPE WHERE SLEEVING WAS NOT INSTALLED REQUIRES HORIZONTAL BORING BY THE IRRIGATION CONTRACTOR. CONTRACTOR IS TO NOTCH AN "X" IN CONCRETE AT LOCATION OF SLEEVES ON BOTH SIDES OF SIDEWALK.
9. CONNECT ELECTRICAL POWER TO THE IRRIGATION CONTROL SYSTEM IN ACCORDANCE WITH THE NATIONAL ELECTRIC CODE AND ALL APPLICABLE LOCAL ELECTRIC UTILITY CODES.
10. WITH REGARD TO PIPE SIZING, THE FOLLOWING SHOULD BE NOTED:

    A. IF A SECTION OF UNSIZED PIPE IS LOCATED BETWEEN TWO IDENTICALLY SIZED SECTIONS, THE UNSIZED PIPE IS THE SAME NOMINAL SIZE AS THE TWO SIZED SECTIONS. THE UNSIZED PIPE SHOULD NOT BE CONFUSED WITH THE DEFAULT PIPE SIZE NOTED IN THE LEGEND.
11. INSTALL VAN NOZZLES WHERE SPRAY ANGLES ARE LESS OR GREATER THAN WHAT A FIXED SPRAY NOZZLE CAN IRRIGATE WITHOUT EXCESSIVE OVERSPRAY.
12. THE CONTRACTOR IS RESPONSIBLE FOR REPAIR OF EXISTING TURF AND NATIVE SEED AREAS DISTURBED DUE TO IRRIGATION INSTALLATION ACTIVITIES. DISTURBED AREAS INCLUDE THE FOLLOWING BUT ARE NOT LIMITED TO: TRENCHING, SPOILS LEFT ADJACENT TO THE TRENCH THAT DAMAGES EXISTING TURF, CONSTRUCTION EQUIPMENT WEAR ON EXISTING TURF, AND ANY OTHER DAMAGE INCURRED DURING IRRIGATION INSTALLATION ACTIVITIES. THE CONTRACTOR MUST PROVIDE AND INSTALL "ECONOMY BLEND" SEED FROM BUFFALO SEED BRAND COMPANY FOR DISTURBED TURF AREAS AND MUST PROVIDE AND INSTALL STERILE WHEAT FOR NATIVE AREAS. BACKFILLED AREAS MUST BE RETURNED TO ORIGINAL GRADE USING A CLEAN NATIVE LOAM TOPSOIL APPROVED BY CITY OF GREELEY REPRESENTATIVES PRIOR TO INSTALLATION. CONFIRM WITH OWNER'S REPRESENTATIVE THAT ALL DISTURBED AREAS MEET OR EXCEED REPAIR REQUIREMENTS PRIOR TO FINAL PAYMENT.

LEGEND

- SLEEVING: CL 200 PVC, REFER TO SPECIFICATIONS FOR SIZING
- IRRIGATION MAINLINE PIPE: 2.5" AND SMALLER: SCH 40 PVC, 3" AND LARGER: CL 200 PVC, SIZE AS SHOWN
- SPRINKLER LATERAL PIPE: SCH 40 PVC, 1" UNLESS OTHERWISE NOTED
- 1" SCH 40 PVC SHRUB DRIP LATERAL PIPE
- POINT-OF-CONNECTION (P.O.C.) ASSEMBLY
- M — MASTER VALVE: 6" GRISWOLD 2160 NORMALLY OPEN
- F — FLOW SENSOR: 6" NETAFIM OCTAVE ULTRASONIC 360CT06GAL1.0
- ISOLATION GATE VALVE: 2.5" AND SMALLER: NIBCO T-113-K 3" AND LARGER: CLOW OR EQUAL, SIZE TO MATCH MAINLINE
- QUICK COUPLING VALVE: RAIN BIRD 5LRC
- AIR/VACUUM RELIEF VALVE: 2" WATERMAN AV-150
- MANUAL DRAIN VALVE: REFER TO DETAIL
- E — EXISTING DRIP VALVE TO BE REPLACED, REFER TO FLAG NOTE 3
- DRIP REMOTE CONTROL VALVE: RAIN BIRD XCZ-100-PRB-COM, SPEARS TRUE UNION BALL VALVE
- SPRINKLER REMOTE CONTROL VALVE: RAIN BIRD PESB, SPEARS TRUE UNION BALL VALVE, SIZE AS SHOWN

POP-UP SPRINKLER: RAIN BIRD MPR SERIES ON RD-04-S-P30-F
RADIUS: 12' FLOW (GPM): Q-0.65 H-1.30 F-2.60
RADIUS: 15' FLOW (GPM): Q-0.92 H-1.85 F-3.70

ROTOR SPRINKLER: RAIN BIRD 5004-SAM-PLUS-PRS-SS, 45 PSI

MPR NOZZLE	FLOW(GPM)	RADIUS(FEET)
25	Q-1.00 H-1.98 F-3.82	25'
30	Q-1.40 H-2.96 F-5.78	30'
35	Q-1.92 H-3.81 F-7.58	35'

ROTOR SPRINKLER: RAIN BIRD 8005-SS, 60 PSI

NOZZLE	FLOW(GPM)	RADIUS(FEET)
4	3.8	39'
6	6.1	45'
8	8.4	49'
10	10.1	53'
12	12	59'
16	15.9	65'
20	20.1	67''

ROTOR SPRINKLER: RAIN BIRD EAGLE 900S-80

NOZZLE	FLOW(GPM)	RADIUS(FEET)
56	43.5	85'
64	51	93'

ROTOR SPRINKLER: RAIN BIRD EAGLE 950S-80

NOZZLE	FLOW(GPM)	RADIUS(FEET)
24	36	84'

- A — IRRIGATION CONTROL SYSTEM: BASELINE BL-3200X-R36-BMGR-PLUS
  *INSTALL ONE BL-5201 DECODER WITH EACH SOLENOID VALVE
  *INSTALL ONE BL-5201MV DECODER WITH EACH MASTER VALVE
  *INSTALL ONE BL-5309 DECODER WITH EACH FLOW SENSOR
  *CONTACT TRACY SHIELDS WHEN ORDERING: (970) 939-6134
  *AUTHORIZED BASELINE EXTENDED WARRANTY CERTIFICATION TECHNICIAN TO PERFORM GROUNDING OHMS TEST AT CONTROLLERS AND ALONG TWO-WIRE PATH GROUNDING RODS. CONTROLLERS MUST BE GROUNDED TO 10 OHMS OR LESS, AND TWO-WIRE GROUNDING RODS (5-10 OHMS DESIRABLE) MUST BE 25 OHMS OR LESS. INCLUDES ALL FIELD INSPECTIONS AND SUBMISSION TO BASELINE FOR APPROVAL.
- SURGE DEVICE ASSEMBLY: BASELINE BL-LA01, GROUND SYSTEM PER MANUFACTURER GUIDELINES
- SOIL MOISTURE SENSOR: BASELINE biSENSOR BL-5315B, INSTALL PER MANUFACTURER'S GUIDELINES
- R — RAIN SENSOR: RAIN BIRD RSD OR EQUAL

A1
77
2"
XXmin

- VALVE STATION
- FLOW (GPM)
- VALVE SIZE (INCHES)
- #min = ESTIMATED RUN TIME FOR SPRINKLERS TO APPLY 0.25", DC = INFIELD DUST CONTROL

VALVE BOXES: RAIN BIRD VB SERIES (OR APPROVED EQUAL) WITH PURPLE LIDS. REFER TO DETAILS FOR VALVE BOX SIZES.

FLAG NOTES

1. EXCAVATE AND EXPOSE EXISTING 6" MAINLINE PIPE AT THE APPROXIMATE LOCATION SHOWN. CONNECT TO PIPE AND EXTEND PVC PIPE TO MASTER VALVE AND FLOW SENSOR ASSEMBLIES. COORDINATE EXACT PLACEMENT OF MASTER VALVE, AND FLOW SENSOR ASSEMBLIES WITH THE OWNER'S REPRESENTATIVE ON SITE PRIOR TO CONSTRUCTION.
2. TWO EXISTING CONTROLLER ASSEMBLIES ARE EXISTING.

   SMALLER EXISTING CONTROLLER ASSEMBLY:
   *REMOVE CONTROLLER ASSEMBLY AND TURN OVER TO CITY OF GREELEY REPRESENTATIVES.
   *CONTROL WIRES WILL BE REUSED AND CONNECTED TO THE NEW IRRIGATION CONTROLLER.

   LARGER EXISTING CONTROLLER ASSEMBLY:
   *THE CONTROLLERS LOCATED WITHIN THE LARGER OF THE TWO EXISTING CONTROLLER ASSEMBLIES ARE TO BE REMOVED AND TURNED OVER TO CITY OF GREELEY REPRESENTATIVES.
   *THE NEW IRRIGATION CONTROLLER MUST BE INSTALLED IN THE LARGER OF THE TWO EXISTING CONTROLLER ENCLOSURES.
   *THE LARGER ENCLOSURE MUST BE MOVED ON THE WALL TO THE EXISTING LOCATION OF THE SMALLER CONTROLLER ASSEMBLY. COORDINATE EXACT PLACEMENT OF CONTROLLER WITH THE OWNER'S REPRESENTATIVE ON SITE PRIOR TO CONSTRUCTION.
   *ELECTRICAL POWER FROM THE EXISTING CONTROLLER ASSEMBLY WILL BE USED AND ETHERNET WILL BE PROVIDED. PROVIDE ALL NECESSARY CONDUIT AND CONDUCTORS BETWEEN ELECTRICAL POWER SOURCE AND IRRIGATION CONTROLLER AND MAKE ALL NECESSARY CONNECTIONS.
   *THE EXISTING TRADITIONAL CONTROL WIRES THAT SERVICE THE PARKING LOT ON THE WESTERN EDGE OF THE SITE ARE TO BE WIRED TO THE NEW CONTROLLER PER MANUFACTURER'S INSTRUCTION.
3. REMOVE EXISTING DRIP VALVE AT THIS LOCATION AND RETURN TO OWNER'S REPRESENTATIVE. INSTALL NEW DRIP VALVE AT LOCATION SHOWN ON NEW MAINLINE. EXTEND PVC PIPE FROM NEW VALVE LOCATION TO OLD VALVE LOCATION AND CONNECT PVC PIPES USING REQUIRED FITTINGS.
4. EXCAVATE AND EXPOSE 6" PIPE AT THIS APPROXIMATE LOCATION. CONNECT NEW 6" PVC MAINLINE USING REQUIRED FITTINGS. ALL EXISTING IRRIGATION SERVICED BY THIS MAINLINE IS TO BE CONNECTED TO THE NEW CONTROL SYSTEM AND REMAIN FULLY OPERATIONAL.
5. EXCAVATE AND EXPOSE PIPE AT THIS APPROXIMATE LOCATION. PRESERVE MAINLINE CONNECTION TO EXISTING QUICK COUPLER VALVE LOCATED AT NORTHERN PRACTICE FIELDS USING REQUIRED FITTINGS.
6. INSTALL BASELINE SOIL MOISTURE SENSOR AT THIS APPROXIMATE LOCATION PER MANUFACTURER'S INSTALLATION GUIDELINES. PROGRAM CONTROL SYSTEM SO SIMILAR ZONES IN THE VICINITY USE THE SOIL MOISTURE SENSOR. COORDINATE SENSOR PLACEMENT, INSTALLATION AND PROGRAMMING WITH THE OWNER'S REPRESENTATIVE ON SITE PRIOR TO CONSTRUCTION.
7. INSTALL DECODER GROUNDING EQUIPMENT THAT MEETS CONTROLLER MANUFACTURER'S GUIDELINES AT LOCATION ADJACENT TO INDICATED REMOTE CONTROL VALVE OR TWO WIRE PATH. GROUNDING ROD IS TO BE INSTALLED A MINIMUM DISTANCE OF 10' AWAY FROM ANY TWO-WIRE RUNS. COORDINATE EXACT LOCATION OF GROUNDING EQUIPMENT WITH THE OWNER'S REPRESENTATIVE ON SITE PRIOR TO CONSTRUCTION. THE IRRIGATION CONTRACTOR IS RESPONSIBLE FOR GROUNDING AND TESTING THE ENTIRE TWO WIRE PATH PER MANUFACTURER'S GUIDELINES.
8. INSTALL RAIN SENSOR ON BUILDING WALL NEAR TOP OF WALL IN APPROXIMATE LOCATION SHOWN. COORDINATE EXACT LOCATION WITH OWNER'S REPRESENTATIVE ON SITE PRIOR TO CONSTRUCTION.
9. USE EXISTING WIRING CONDUIT IN APPROXIMATE LOCATION FOR ROUTING NEW TWO-WIRE CABLE TO NEW CONTROLLER. COORDINATE EXACT LOCATION OF EXISTING CONDUIT WITH OWNER'S REPRESENTATIVE ON SITE PRIOR TO CONSTRUCTION.
10. REMOVE EXISTING REMOTE CONTROL VALVE AT THIS LOCATION AND RETURN TO OWNER'S REPRESENTATIVE. INSTALL NEW VALVE AT LOCATION SHOWN ON NEW MAINLINE. EXTEND PVC PIPE FROM NEW VALVE LOCATION TO EXISTING SPRAY SPRINKLERS IN EXISTING SHRUB BED AND CONNECT PVC PIPES USING NECESSARY SCH 40 FITTINGS.

BID ALTERNATE NOTES

B1 PROVIDE SEPARATE BID FOR THE DEMOLITION AND REMOVAL OF THE EXISTING VAULT AND COMPONENTS AT THIS APPROXIMATE LOCATION. TURN OVER MASTER VALVE AND FLOW SENSOR ASSEMBLIES TO CITY OF GREELEY REPRESENTATIVES.

ALLOWABLE PIPE DEFLECTION

PIPE SIZE (INCHES)	RADIUS (FEET)	OFFSET PER 20' LENGTH
1.5 - 2	25	7'-8"
2.5 - 4	100	1'-11"
6	150	1'-4"
8	200	1'-0"
10	250	9"
12	300	8"

SCH 40 PVC SIZING SCHEDULE

PIPE SIZE (INCHES)	FLOW RANGE (GPM) @ < 5 FPS
0.5	0 - 4
0.75	4 - 8
1	8 - 13
1.25	13 - 22
1.5	22 - 30
2	30 - 50
2.5	50 - 70
3	70 - 110
4	110 - 180
6	180 - 450
8	450 - 700
10	700 - 1200
12	1200 - 1600

CL 200 PVC SIZING SCHEDULE

PIPE SIZE (INCHES)	FLOW RANGE (GPM) @ < 5 FPS
0.75	0 - 10
1	10 - 16
1.25	16 - 26
1.5	26 - 36
2	36 - 55
2.5	55 - 80
3	80 - 120
4	120 - 200
6	200 - 425
8	425 - 700
10	700 - 1150
12	1150 - 1600

Aqua Engineering Inc.
Innovative Water Solutions

City of Greeley Colorado
Great. From the Ground Up.

Youth Sports Complex
Greeley, Colorado
Irrigation Cover Sheet

100%
CONSTRUCTION DOCUMENTS

DATE	December 18, 2019
DESIGNED BY	RJP/CBK
DRAWN BY	RJP
CHECKED BY	CBK

REVISIONS
-
-
-
-

SHEET NO.
IR0

File: Q:\COG\GYSC\P-GYSC.dwg printed by Ron Perez on 12/18/2019 10:43:11 AM using AutoCAD Version: 23.1s (LMS Tech)

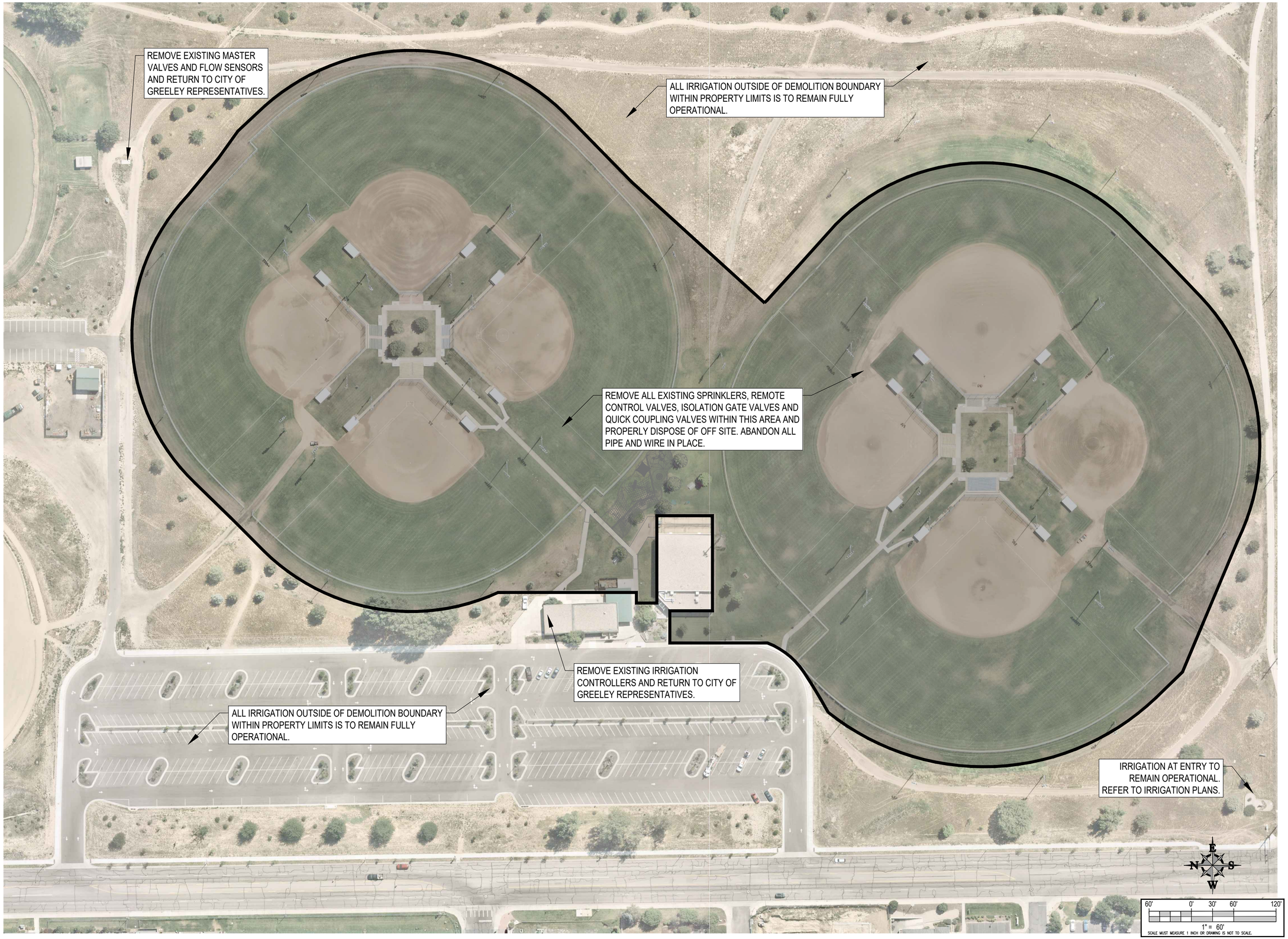

Aqua Engineering Inc.
Innovative Water Solutions

City of Greeley Colorado
Great. From the Ground Up.

Youth Sports Complex
Greeley, Colorado
Irrigation Demolition Plan

100%
CONSTRUCTION DOCUMENTS

DATE	December 18, 2019
DESIGNED BY	RJP/CBK
DRAWN BY	RJP
CHECKED BY	CBK

REVISIONS
-
-
-
-

SHEET NO.
IR0.1

File: G:\CDG\GYSC\P-GYSC.dwg printed by Ron Perez on 12/18/2019 10:43:20 AM using AutoCAD Version: 23.1s (LMS Tech)

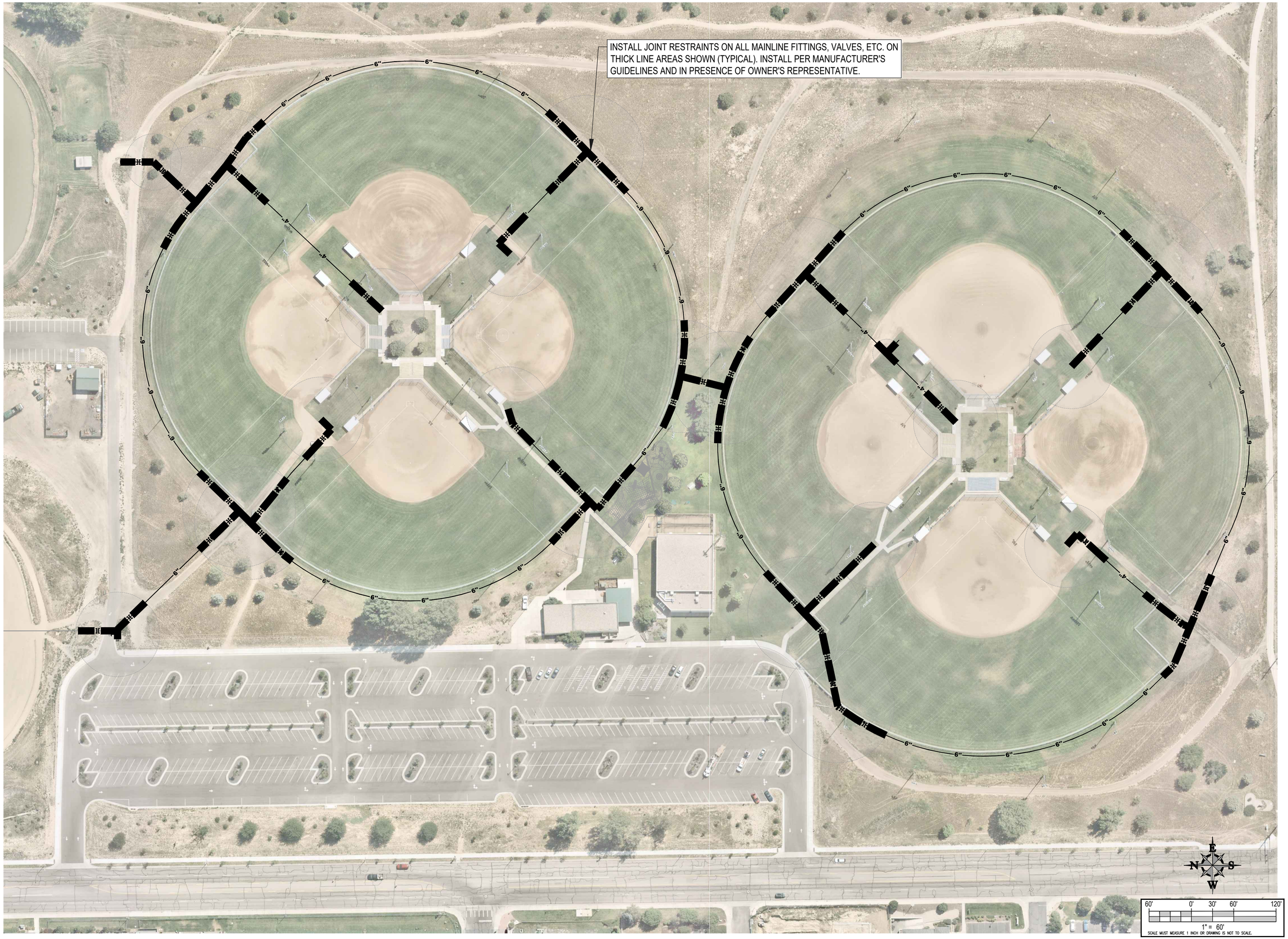

Aqua Engineering Inc.
Innovative Water Solutions

City of Greeley Colorado
Great. From the Ground Up.

Youth Sports Complex
Greeley, Colorado
Irrigation Mainline Joint Restraint Plan

100%
CONSTRUCTION DOCUMENTS

DATE	December 18, 2019
DESIGNED BY	RJP/CBK
DRAWN BY	RJP
CHECKED BY	CBK

REVISIONS
-
-
-
-

SHEET NO.
IR0.2

File: O:\COG\GYSC\P-GYSC.dwg printed by Ron Perez on 12/18/2019 10:43:27 AM using AutoCAD Version: 23.1s (LMS Tech)

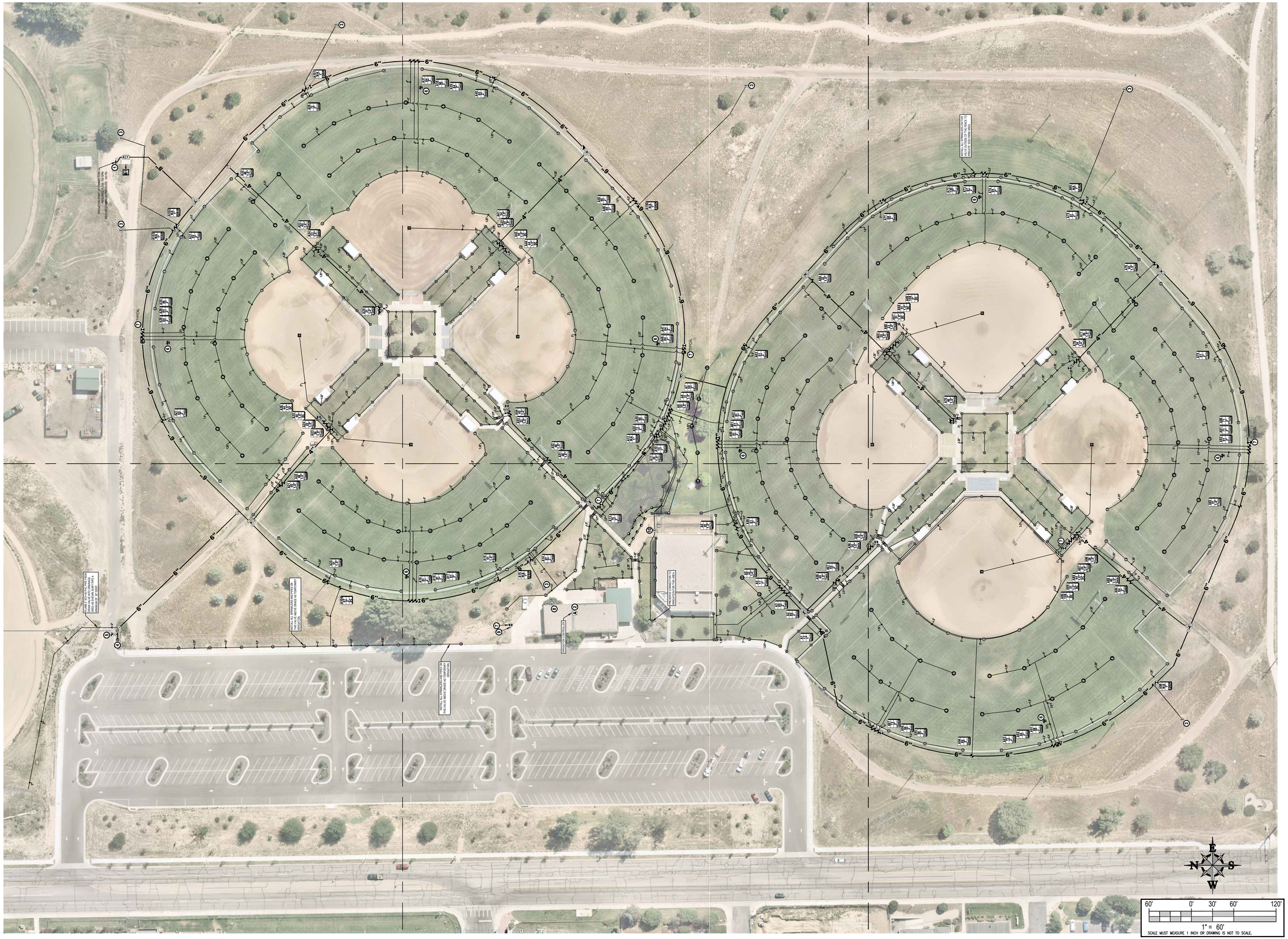

Aqua Engineering Inc.
Innovative Water Solutions

City of Greeley Colorado
Great. From the Ground Up.

Youth Sports Complex
Greeley, Colorado
Overall Irrigation Plan

100%
CONSTRUCTION DOCUMENTS

DATE	December 18, 2019
DESIGNED BY	RJP/CBK
DRAWN BY	RJP
CHECKED BY	CBK

REVISIONS
-
-
-
-

SHEET NO.
IR1

File: Q:\COG\GYSC\P-GYSC.dwg printed by Ron Perez on 12/18/2019 10:43:34 AM using AutoCAD Version: 23.1s (LMS Tech)

LEGEND

- SLEEVING: CL 200 PVC, REFER TO SPECIFICATIONS FOR SIZING
- IRRIGATION MAINLINE PIPE: 2.5" AND SMALLER: SCH 40 PVC, 3" AND LARGER: CL 200 PVC, SIZE AS SHOWN
- SPRINKLER LATERAL PIPE: SCH 40 PVC, 1" UNLESS OTHERWISE NOTED
- 1" SCH 40 PVC SHRUB DRIP LATERAL PIPE
- POINT-OF-CONNECTION (P.O.C.) ASSEMBLY
- M — MASTER VALVE: 6" GRISWOLD 2160 NORMALLY OPEN
- F — FLOW SENSOR: 6" NETAFIM OCTAVE ULTRASONIC 36OCT06GAL1.0
- ISOLATION GATE VALVE: 2.5" AND SMALLER: NIBCO T-113-K 3" AND LARGER: CLOW OR EQUAL, SIZE TO MATCH MAINLINE
- QUICK COUPLING VALVE: RAIN BIRD 5LRC
- AIR/VACUUM RELIEF VALVE: 2" WATERMAN AV-150
- MANUAL DRAIN VALVE: REFER TO DETAIL
- E — EXISTING DRIP VALVE TO BE REPLACED, REFER TO FLAG NOTE 3
- DRIP REMOTE CONTROL VALVE: RAIN BIRD XCZ-100-PRB-COM, SPEARS TRUE UNION BALL VALVE
- SPRINKLER REMOTE CONTROL VALVE: RAIN BIRD PESB, SPEARS TRUE UNION BALL VALVE, SIZE AS SHOWN

POP-UP SPRINKLER: RAIN BIRD MPR SERIES ON RD-04-S-P30-F

RADIUS: 12'	FLOW (GPM):	Q-0.65	H-1.30	F-2.60
RADIUS: 15'	FLOW (GPM):	Q-0.92	H-1.85	F-3.70

ROTOR SPRINKLER: RAIN BIRD 5004-SAM-PLUS-PRS-SS, 45 PSI

MPR NOZZLE	FLOW(GPM)			RADIUS(FEET)
25	Q-1.00	H-1.98	F-3.82	25'
30	Q-1.40	H-2.96	F-5.78	30'
35	Q-1.92	H-3.81	F-7.58	35'

ROTOR SPRINKLER: RAIN BIRD 8005-SS, 60 PSI

NOZZLE	FLOW(GPM)	RADIUS(FEET)
4	3.8	39'
6	6.1	45'
8	8.4	49'
10	10.1	53'
12	12	59'
16	15.9	65'
20	20.1	67''

ROTOR SPRINKLER: RAIN BIRD EAGLE 900S-80

NOZZLE	FLOW(GPM)	RADIUS(FEET)
56	43.5	85'
64	51	93'

ROTOR SPRINKLER: RAIN BIRD EAGLE 950S-80

NOZZLE	FLOW(GPM)	RADIUS(FEET)
24	36	84'

IRRIGATION CONTROL SYSTEM: BASELINE BL-3200X-R36-BMGR-PLUS
*INSTALL ONE BL-5201 DECODER WITH EACH SOLENOID VALVE
*INSTALL ONE BL-5201MV DECODER WITH EACH MASTER VALVE
*INSTALL ONE BL-5309 DECODER WITH EACH FLOW SENSOR
*CONTACT TRACY SHIELDS WHEN ORDERING: (970) 939-6134
*AUTHORIZED BASELINE EXTENDED WARRANTY CERTIFICATION TECHNICIAN TO PERFORM GROUNDING OHMS TEST AT CONTROLLERS AND ALONG TWO-WIRE PATH GROUNDING RODS. CONTROLLERS MUST BE GROUNDED TO 10 OHMS OR LESS, AND TWO-WIRE GROUNDING RODS (5-10 OHMS DESIRABLE) MUST BE 25 OHMS OR LESS. INCLUDES ALL FIELD INSPECTIONS AND SUBMISSION TO BASELINE FOR APPROVAL.

SURGE DEVICE ASSEMBLY: BASELINE BL-LA01, GROUND SYSTEM PER MANUFACTURER GUIDELINES

SOIL MOISTURE SENSOR: BASELINE biSENSOR BL-5315B, INSTALL PER MANUFACTURER'S GUIDELINES

R — RAIN SENSOR: RAIN BIRD RSD OR EQUAL

A1 / 77 / 2" / XXmin
- VALVE STATION
- FLOW (GPM)
- VALVE SIZE (INCHES)
- #min = ESTIMATED RUN TIME FOR SPRINKLERS TO APPLY 0.25", DC = INFIELD DUST CONTROL

VALVE BOXES: RAIN BIRD VB SERIES (OR APPROVED EQUAL) WITH PURPLE LIDS. REFER TO DETAILS FOR VALVE BOX SIZES.

N W E S

30' 0' 15' 30' 60'
1" = 30'
SCALE MUST MEASURE 1 INCH OR DRAWING IS NOT TO SCALE.

KEY MAP

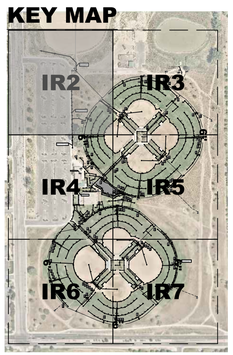

Aqua Engineering Inc.
Innovative Water Solutions

City of Greeley Colorado
Great. From the Ground Up.

Youth Sports Complex
Greeley, Colorado
Irrigation Plan

100%
CONSTRUCTION DOCUMENTS

DATE	December 18, 2019
DESIGNED BY	RJP/CBK
DRAWN BY	RJP
CHECKED BY	CBK

REVISIONS
-
-
-
-

SHEET NO.
IR2

File: O:\COG\GYSC\P-GYSC.dwg printed by Ron Perez on 12/18/2019 10:43:43 AM using AutoCAD Version: 23.1s (LMS Tech)

LEGEND

- SLEEVING: CL 200 PVC, REFER TO SPECIFICATIONS FOR SIZING
- IRRIGATION MAINLINE PIPE: 2.5" AND SMALLER: SCH 40 PVC, 3" AND LARGER: CL 200 PVC, SIZE AS SHOWN
- SPRINKLER LATERAL PIPE: SCH 40 PVC, 1" UNLESS OTHERWISE NOTED
- 1" SCH 40 PVC SHRUB DRIP LATERAL PIPE
- POINT-OF-CONNECTION (P.O.C.) ASSEMBLY
- M — MASTER VALVE: 6" GRISWOLD 2160 NORMALLY OPEN
- F — FLOW SENSOR: 6" NETAFIM OCTAVE ULTRASONIC 36OCT06GAL1.0
- ISOLATION GATE VALVE: 2.5" AND SMALLER: NIBCO T-113-K
  3" AND LARGER: CLOW OR EQUAL, SIZE TO MATCH MAINLINE
- QUICK COUPLING VALVE: RAIN BIRD 5LRC
- AIR/VACUUM RELIEF VALVE: 2" WATERMAN AV-150
- MANUAL DRAIN VALVE: REFER TO DETAIL
- E — EXISTING DRIP VALVE TO BE REPLACED, REFER TO FLAG NOTE 3
- DRIP REMOTE CONTROL VALVE: RAIN BIRD XCZ-100-PRB-COM, SPEARS TRUE UNION BALL VALVE
- SPRINKLER REMOTE CONTROL VALVE: RAIN BIRD PESB, SPEARS TRUE UNION BALL VALVE, SIZE AS SHOWN

POP-UP SPRINKLER: RAIN BIRD MPR SERIES ON RD-04-S-P30-F

RADIUS: 12'	FLOW (GPM):	Q-0.65	H-1.30	F-2.60
RADIUS: 15'	FLOW (GPM):	Q-0.92	H-1.85	F-3.70

ROTOR SPRINKLER: RAIN BIRD 5004-SAM-PLUS-PRS-SS, 45 PSI

MPR NOZZLE	FLOW(GPM)			RADIUS(FEET)
25	Q-1.00	H-1.98	F-3.82	25'
30	Q-1.40	H-2.96	F-5.78	30'
35	Q-1.92	H-3.81	F-7.58	35'

ROTOR SPRINKLER: RAIN BIRD 8005-SS, 60 PSI

NOZZLE	FLOW(GPM)	RADIUS(FEET)
4	3.8	39'
6	6.1	45'
8	8.4	49'
10	10.1	53'
12	12	59'
16	15.9	65'
20	20.1	67''

ROTOR SPRINKLER: RAIN BIRD EAGLE 900S-80

NOZZLE	FLOW(GPM)	RADIUS(FEET)
56	43.5	85'
64	51	93'

ROTOR SPRINKLER: RAIN BIRD EAGLE 950S-80

NOZZLE	FLOW(GPM)	RADIUS(FEET)
24	36	84'

IRRIGATION CONTROL SYSTEM: BASELINE BL-3200X-R36-BMGR-PLUS
*INSTALL ONE BL-5201 DECODER WITH EACH SOLENOID VALVE
*INSTALL ONE BL-5201MV DECODER WITH EACH MASTER VALVE
*INSTALL ONE BL-5309 DECODER WITH EACH FLOW SENSOR
*CONTACT TRACY SHIELDS WHEN ORDERING: (970) 939-6134
*AUTHORIZED BASELINE EXTENDED WARRANTY CERTIFICATION TECHNICIAN TO PERFORM GROUNDING OHMS TEST AT CONTROLLERS AND ALONG TWO-WIRE PATH GROUNDING RODS. CONTROLLERS MUST BE GROUNDED TO 10 OHMS OR LESS, AND TWO-WIRE GROUNDING RODS (5-10 OHMS DESIRABLE) MUST BE 25 OHMS OR LESS. INCLUDES ALL FIELD INSPECTIONS AND SUBMISSION TO BASELINE FOR APPROVAL.

SURGE DEVICE ASSEMBLY: BASELINE BL-LA01, GROUND SYSTEM PER MANUFACTURER GUIDELINES

SOIL MOISTURE SENSOR: BASELINE biSENSOR BL-5315B, INSTALL PER MANUFACTURER'S GUIDELINES

R — RAIN SENSOR: RAIN BIRD RSD OR EQUAL

A1 / 77 / 2" / 7Xmin
- VALVE STATION
- FLOW (GPM)
- VALVE SIZE (INCHES)
- #min = ESTIMATED RUN TIME FOR SPRINKLERS TO APPLY 0.25", DC = INFIELD DUST CONTROL

VALVE BOXES: RAIN BIRD VB SERIES (OR APPROVED EQUAL) WITH PURPLE LIDS. REFER TO DETAILS FOR VALVE BOX SIZES.

N W E S

30' 0' 15' 30' 60'
1" = 30'
SCALE MUST MEASURE 1 INCH OR DRAWING IS NOT TO SCALE.

KEY MAP

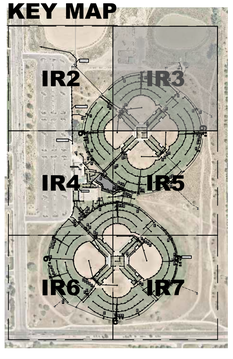

Aqua Engineering Inc.
Innovative Water Solutions

City of Greeley Colorado
Great. From the Ground Up.

Youth Sports Complex
Greeley, Colorado
Irrigation Plan

100%
CONSTRUCTION DOCUMENTS

DATE	December 18, 2019
DESIGNED BY	RJP/CBK
DRAWN BY	RJP
CHECKED BY	CBK

REVISIONS
-
-
-
-

SHEET NO.
IR3

File: O:\CGS\GYSC\P-GYSC.dwg printed by Ron Perez on 12/18/2019 10:43:51 AM using AutoCAD Version: 23.1s (LMS Tech)

MATCHLINE SEE SHEET IR2

MATCHLINE SEE SHEET IR5

MATCHLINE SEE SHEET IR6

LEGEND

- SLEEVING: CL 200 PVC, REFER TO SPECIFICATIONS FOR SIZING
- IRRIGATION MAINLINE PIPE: 2.5" AND SMALLER: SCH 40 PVC, 3" AND LARGER: CL 200 PVC, SIZE AS SHOWN
- SPRINKLER LATERAL PIPE: SCH 40 PVC, 1" UNLESS OTHERWISE NOTED
- 1" SCH 40 PVC SHRUB DRIP LATERAL PIPE
- POINT-OF-CONNECTION (P.O.C.) ASSEMBLY
- M — MASTER VALVE: 6" GRISWOLD 2160 NORMALLY OPEN
- F — FLOW SENSOR: 6" NETAFIM OCTAVE ULTRASONIC 36OCT06GAL1.0
- ISOLATION GATE VALVE: 2.5" AND SMALLER: NIBCO T-113-K 3" AND LARGER: CLOW OR EQUAL, SIZE TO MATCH MAINLINE
- QUICK COUPLING VALVE: RAIN BIRD 5LRC
- AIR/VACUUM RELIEF VALVE: 2" WATERMAN AV-150
- MANUAL DRAIN VALVE: REFER TO DETAIL
- E — EXISTING DRIP VALVE TO BE REPLACED, REFER TO FLAG NOTE 3
- DRIP REMOTE CONTROL VALVE: RAIN BIRD XCZ-100-PRB-COM, SPEARS TRUE UNION BALL VALVE
- SPRINKLER REMOTE CONTROL VALVE: RAIN BIRD PESB, SPEARS TRUE UNION BALL VALVE, SIZE AS SHOWN

POP-UP SPRINKLER: RAIN BIRD MPR SERIES ON RD-04-S-P30-F

RADIUS: 12'	FLOW (GPM):	Q-0.65	H-1.30	F-2.60
RADIUS: 15'	FLOW (GPM):	Q-0.92	H-1.85	F-3.70

ROTOR SPRINKLER: RAIN BIRD 5004-SAM-PLUS-PRS-SS, 45 PSI

MPR NOZZLE	FLOW(GPM)	RADIUS(FEET)
25	Q-1.00 H-1.98 F-3.82	25'
30	Q-1.40 H-2.96 F-5.78	30'
35	Q-1.92 H-3.81 F-7.58	35'

ROTOR SPRINKLER: RAIN BIRD 8005-SS, 60 PSI

NOZZLE	FLOW(GPM)	RADIUS(FEET)
4	3.8	39'
6	6.1	45'
8	8.4	49'
10	10.1	53'
12	12	59'
16	15.9	65'
20	20.1	67''

ROTOR SPRINKLER: RAIN BIRD EAGLE 900S-80

NOZZLE	FLOW(GPM)	RADIUS(FEET)
56	43.5	85'
64	51	93'

ROTOR SPRINKLER: RAIN BIRD EAGLE 950S-80

NOZZLE	FLOW(GPM)	RADIUS(FEET)
24	36	84'

A — IRRIGATION CONTROL SYSTEM: BASELINE BL-3200X-R36-BMGR-PLUS
*INSTALL ONE BL-5201 DECODER WITH EACH SOLENOID VALVE
*INSTALL ONE BL-5201MV DECODER WITH EACH MASTER VALVE
*INSTALL ONE BL-5309 DECODER WITH EACH FLOW SENSOR
*CONTACT TRACY SHIELDS WHEN ORDERING: (970) 939-6134
*AUTHORIZED BASELINE EXTENDED WARRANTY CERTIFICATION TECHNICIAN TO PERFORM GROUNDING OHMS TEST AT CONTROLLERS AND ALONG TWO-WIRE PATH GROUNDING RODS. CONTROLLERS MUST BE GROUNDED TO 10 OHMS OR LESS, AND TWO-WIRE GROUNDING RODS (5-10 OHMS DESIRABLE) MUST BE 25 OHMS OR LESS. INCLUDES ALL FIELD INSPECTIONS AND SUBMISSION TO BASELINE FOR APPROVAL.

SURGE DEVICE ASSEMBLY: BASELINE BL-LA01, GROUND SYSTEM PER MANUFACTURER GUIDELINES

SOIL MOISTURE SENSOR: BASELINE biSENSOR BL-5315B, INSTALL PER MANUFACTURER'S GUIDELINES

R — RAIN SENSOR: RAIN BIRD RSD OR EQUAL

A1 / 77 / 2" / XXmin
- VALVE STATION
- FLOW (GPM)
- VALVE SIZE (INCHES)
- #min = ESTIMATED RUN TIME FOR SPRINKLERS TO APPLY 0.25", DC = INFIELD DUST CONTROL

VALVE BOXES: RAIN BIRD VB SERIES (OR APPROVED EQUAL) WITH PURPLE LIDS. REFER TO DETAILS FOR VALVE BOX SIZES.

N W E S

30' 0' 15' 30' 60'
1" = 30'
SCALE MUST MEASURE 1 INCH OR DRAWING IS NOT TO SCALE.

KEY MAP

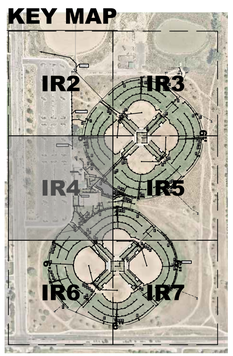

Aqua Engineering Inc.
Innovative Water Solutions

City of Greeley Colorado
Great. From the Ground Up.

Youth Sports Complex
Greeley, Colorado
Irrigation Plan

100%
CONSTRUCTION DOCUMENTS

DATE	December 18, 2019
DESIGNED BY	RJP/CBK
DRAWN BY	RJP
CHECKED BY	CBK

REVISIONS
-
-
-
-

SHEET NO.
IR4

File: Q:\CDG\GPSC\P-GPSC.dwg printed by Ron Perez on 12/18/2019 10:44:01 AM using AutoCAD Version: 23.1s (LMS Tech)

MATCHLINE SEE SHEET IR3

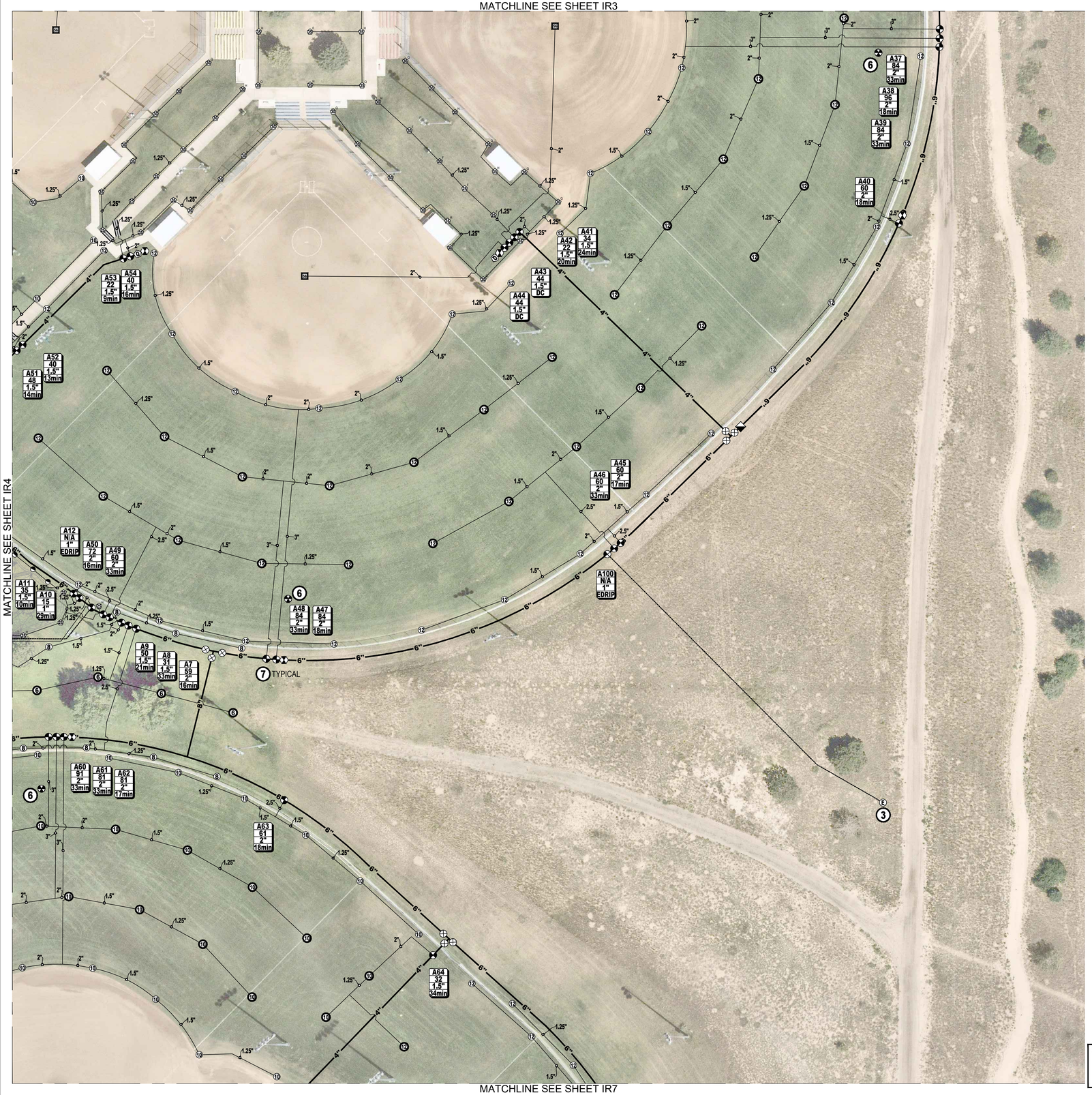

MATCHLINE SEE SHEET IR4

MATCHLINE SEE SHEET IR7

LEGEND

- SLEEVING: CL 200 PVC, REFER TO SPECIFICATIONS FOR SIZING
- IRRIGATION MAINLINE PIPE: 2.5" AND SMALLER: SCH 40 PVC, 3" AND LARGER: CL 200 PVC, SIZE AS SHOWN
- SPRINKLER LATERAL PIPE: SCH 40 PVC, 1" UNLESS OTHERWISE NOTED
- 1" SCH 40 PVC SHRUB DRIP LATERAL PIPE
- POINT-OF-CONNECTION (P.O.C.) ASSEMBLY
- M — MASTER VALVE: 6" GRISWOLD 2160 NORMALLY OPEN
- F — FLOW SENSOR: 6" NETAFIM OCTAVE ULTRASONIC 36OCT06GAL1.0
- ISOLATION GATE VALVE: 2.5" AND SMALLER: NIBCO T-113-K 3" AND LARGER: CLOW OR EQUAL, SIZE TO MATCH MAINLINE
- QUICK COUPLING VALVE: RAIN BIRD 5LRC
- AIR/VACUUM RELIEF VALVE: 2" WATERMAN AV-150
- MANUAL DRAIN VALVE: REFER TO DETAIL
- E — EXISTING DRIP VALVE TO BE REPLACED, REFER TO FLAG NOTE 3
- DRIP REMOTE CONTROL VALVE: RAIN BIRD XCZ-100-PRB-COM, SPEARS TRUE UNION BALL VALVE
- SPRINKLER REMOTE CONTROL VALVE: RAIN BIRD PESB, SPEARS TRUE UNION BALL VALVE, SIZE AS SHOWN

POP-UP SPRINKLER: RAIN BIRD MPR SERIES ON RD-04-S-P30-F

RADIUS: 12'	FLOW (GPM):	Q-0.65	H-1.30	F-2.60
RADIUS: 15'	FLOW (GPM):	Q-0.92	H-1.85	F-3.70

ROTOR SPRINKLER: RAIN BIRD 5004-SAM-PLUS-PRS-SS, 45 PSI

MPR NOZZLE	FLOW(GPM)			RADIUS(FEET)
25	Q-1.00	H-1.98	F-3.82	25'
30	Q-1.40	H-2.96	F-5.78	30'
35	Q-1.92	H-3.81	F-7.58	35'

ROTOR SPRINKLER: RAIN BIRD 8005-SS, 60 PSI

NOZZLE	FLOW(GPM)	RADIUS(FEET)
4	3.8	39'
6	6.1	45'
8	8.4	49'
10	10.1	53'
12	12	59'
16	15.9	65'
20	20.1	67''

ROTOR SPRINKLER: RAIN BIRD EAGLE 900S-80

NOZZLE	FLOW(GPM)	RADIUS(FEET)
56	43.5	85'
64	51	93'

ROTOR SPRINKLER: RAIN BIRD EAGLE 950S-80

NOZZLE	FLOW(GPM)	RADIUS(FEET)
24	36	84'

A — IRRIGATION CONTROL SYSTEM: BASELINE BL-3200X-R36-BMGR-PLUS
*INSTALL ONE BL-5201 DECODER WITH EACH SOLENOID VALVE
*INSTALL ONE BL-5201MV DECODER WITH EACH MASTER VALVE
*INSTALL ONE BL-5309 DECODER WITH EACH FLOW SENSOR
*CONTACT TRACY SHIELDS WHEN ORDERING: (970) 939-6134
*AUTHORIZED BASELINE EXTENDED WARRANTY CERTIFICATION TECHNICIAN TO PERFORM GROUNDING OHMS TEST AT CONTROLLERS AND ALONG TWO-WIRE PATH GROUNDING RODS. CONTROLLERS MUST BE GROUNDED TO 10 OHMS OR LESS, AND TWO-WIRE GROUNDING RODS (5-10 OHMS DESIRABLE) MUST BE 25 OHMS OR LESS. INCLUDES ALL FIELD INSPECTIONS AND SUBMISSION TO BASELINE FOR APPROVAL.

- SURGE DEVICE ASSEMBLY: BASELINE BL-LA01, GROUND SYSTEM PER MANUFACTURER GUIDELINES
- SOIL MOISTURE SENSOR: BASELINE biSENSOR BL-5315B, INSTALL PER MANUFACTURER'S GUIDELINES
- R — RAIN SENSOR: RAIN BIRD RSD OR EQUAL

A1 / 77 / 2" / XXmin
- VALVE STATION
- FLOW (GPM)
- VALVE SIZE (INCHES)
- #min = ESTIMATED RUN TIME FOR SPRINKLERS TO APPLY 0.25", DC = INFIELD DUST CONTROL

VALVE BOXES: RAIN BIRD VB SERIES (OR APPROVED EQUAL) WITH PURPLE LIDS. REFER TO DETAILS FOR VALVE BOX SIZES.

N W E S

30' 0' 15' 30' 60'
1" = 30'
SCALE MUST MEASURE 1 INCH OR DRAWING IS NOT TO SCALE.

KEY MAP

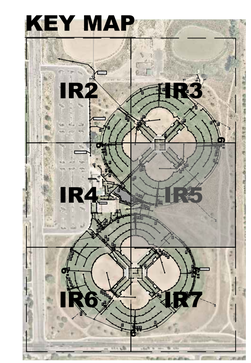

Aqua Engineering Inc.
Innovative Water Solutions

City of Greeley Colorado
Great. From the Ground Up.

Youth Sports Complex
Greeley, Colorado
Irrigation Plan

100%
CONSTRUCTION DOCUMENTS

DATE	December 18, 2019
DESIGNED BY	RJP/CBK
DRAWN BY	RJP
CHECKED BY	CBK

REVISIONS
-
-
-
-

SHEET NO.
IR5

File: Q:\CCG\GYSC\P-GYSC.dwg printed by Ron Perez on 12/18/2019 10:44:10 AM using AutoCAD Version: 23.1s (LMS Tech)

MATCHLINE SEE SHEET IR4

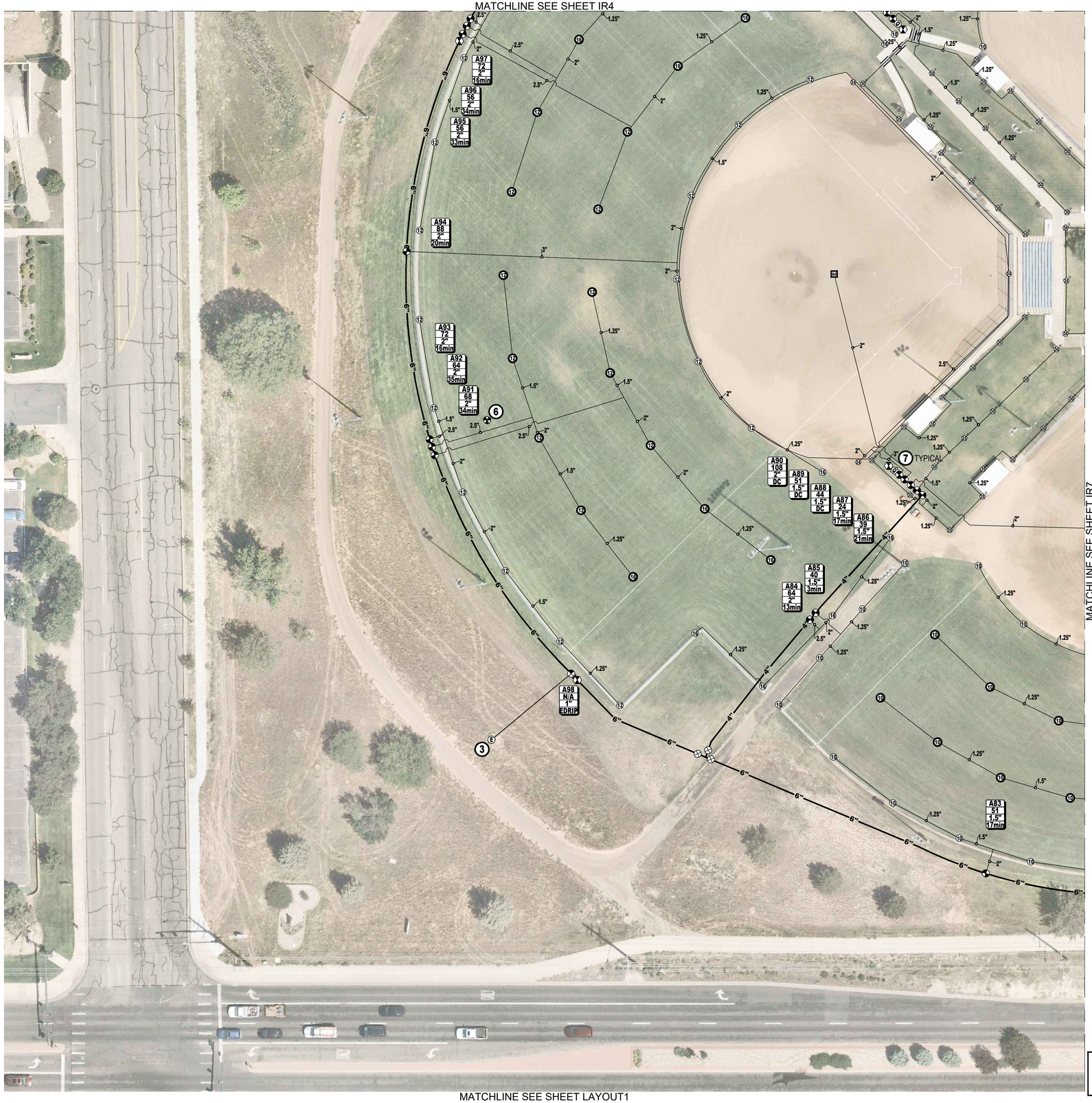

MATCHLINE SEE SHEET IR7

MATCHLINE SEE SHEET LAYOUT1

LEGEND

- SLEEVING: CL 200 PVC, REFER TO SPECIFICATIONS FOR SIZING
- IRRIGATION MAINLINE PIPE: 2.5" AND SMALLER: SCH 40 PVC, 3" AND LARGER: CL 200 PVC, SIZE AS SHOWN
- SPRINKLER LATERAL PIPE: SCH 40 PVC, 1" UNLESS OTHERWISE NOTED
- 1" SCH 40 PVC SHRUB DRIP LATERAL PIPE
- POINT-OF-CONNECTION (P.O.C.) ASSEMBLY
- M — MASTER VALVE: 6" GRISWOLD 2160 NORMALLY OPEN
- F — FLOW SENSOR: 6" NETAFIM OCTAVE ULTRASONIC 36OCT06GAL1.0
- ISOLATION GATE VALVE: 2.5" AND SMALLER: NIBCO T-113-K 3" AND LARGER: CLOW OR EQUAL, SIZE TO MATCH MAINLINE
- QUICK COUPLING VALVE: RAIN BIRD 5LRC
- AIR/VACUUM RELIEF VALVE: 2" WATERMAN AV-150
- MANUAL DRAIN VALVE: REFER TO DETAIL
- E — EXISTING DRIP VALVE TO BE REPLACED, REFER TO FLAG NOTE 3
- DRIP REMOTE CONTROL VALVE: RAIN BIRD XCZ-100-PRB-COM, SPEARS TRUE UNION BALL VALVE
- SPRINKLER REMOTE CONTROL VALVE: RAIN BIRD PESB, SPEARS TRUE UNION BALL VALVE, SIZE AS SHOWN

POP-UP SPRINKLER: RAIN BIRD MPR SERIES ON RD-04-S-P30-F
RADIUS: 12' FLOW (GPM): Q-0.65 H-1.30 F-2.60
RADIUS: 15' FLOW (GPM): Q-0.92 H-1.85 F-3.70

ROTOR SPRINKLER: RAIN BIRD 5004-SAM-PLUS-PRS-SS, 45 PSI

MPR NOZZLE	FLOW(GPM)	RADIUS(FEET)
25	Q-1.00 H-1.98 F-3.82	25'
30	Q-1.40 H-2.96 F-5.78	30'
35	Q-1.92 H-3.81 F-7.58	35'

ROTOR SPRINKLER: RAIN BIRD 8005-SS, 60 PSI

NOZZLE	FLOW(GPM)	RADIUS(FEET)
4	3.8	39'
6	6.1	45'
8	8.4	49'
10	10.1	53'
12	12	59'
16	15.9	65'
20	20.1	67''

ROTOR SPRINKLER: RAIN BIRD EAGLE 900S-80

NOZZLE	FLOW(GPM)	RADIUS(FEET)
56	43.5	85'
64	51	93'

ROTOR SPRINKLER: RAIN BIRD EAGLE 950S-80

NOZZLE	FLOW(GPM)	RADIUS(FEET)
24	36	84'

A — IRRIGATION CONTROL SYSTEM: BASELINE BL-3200X-R36-BMGR-PLUS
*INSTALL ONE BL-5201 DECODER WITH EACH SOLENOID VALVE
*INSTALL ONE BL-5201MV DECODER WITH EACH MASTER VALVE
*INSTALL ONE BL-5309 DECODER WITH EACH FLOW SENSOR
*CONTACT TRACY SHIELDS WHEN ORDERING: (970) 939-6134
*AUTHORIZED BASELINE EXTENDED WARRANTY CERTIFICATION TECHNICIAN TO PERFORM GROUNDING OHMS TEST AT CONTROLLERS AND ALONG TWO-WIRE PATH GROUNDING RODS. CONTROLLERS MUST BE GROUNDED TO 10 OHMS OR LESS, AND TWO-WIRE GROUNDING RODS (5-10 OHMS DESIRABLE) MUST BE 25 OHMS OR LESS. INCLUDES ALL FIELD INSPECTIONS AND SUBMISSION TO BASELINE FOR APPROVAL.

- SURGE DEVICE ASSEMBLY: BASELINE BL-LA01, GROUND SYSTEM PER MANUFACTURER GUIDELINES
- SOIL MOISTURE SENSOR: BASELINE biSENSOR BL-5315B, INSTALL PER MANUFACTURER'S GUIDELINES
- R — RAIN SENSOR: RAIN BIRD RSD OR EQUAL

A1 / 77 / 2" / XXmin
- VALVE STATION
- FLOW (GPM)
- VALVE SIZE (INCHES)
- #min = ESTIMATED RUN TIME FOR SPRINKLERS TO APPLY 0.25", DC = INFIELD DUST CONTROL

VALVE BOXES: RAIN BIRD VB SERIES (OR APPROVED EQUAL) WITH PURPLE LIDS. REFER TO DETAILS FOR VALVE BOX SIZES.

N W E S

30' 0' 15' 30' 60'
1" = 30'
SCALE MUST MEASURE 1 INCH OR DRAWING IS NOT TO SCALE.

KEY MAP

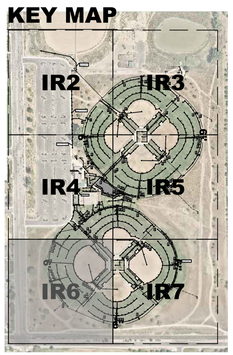

Aqua Engineering Inc.
Innovative Water Solutions

City of Greeley Colorado
Great. From the Ground Up.

Youth Sports Complex
Greeley, Colorado
Irrigation Plan

100%
CONSTRUCTION DOCUMENTS

DATE	December 18, 2019
DESIGNED BY	RJP/CBK
DRAWN BY	RJP
CHECKED BY	CBK

REVISIONS
-
-
-
-

SHEET NO.
IR6

File: O:\COG\OYSC\P-OYSC.dwg printed by Ron Perez on 12/18/2019 10:44:19 AM using AutoCAD Version: 23.1s (LMS Tech)

MATCHLINE SEE SHEET IR5

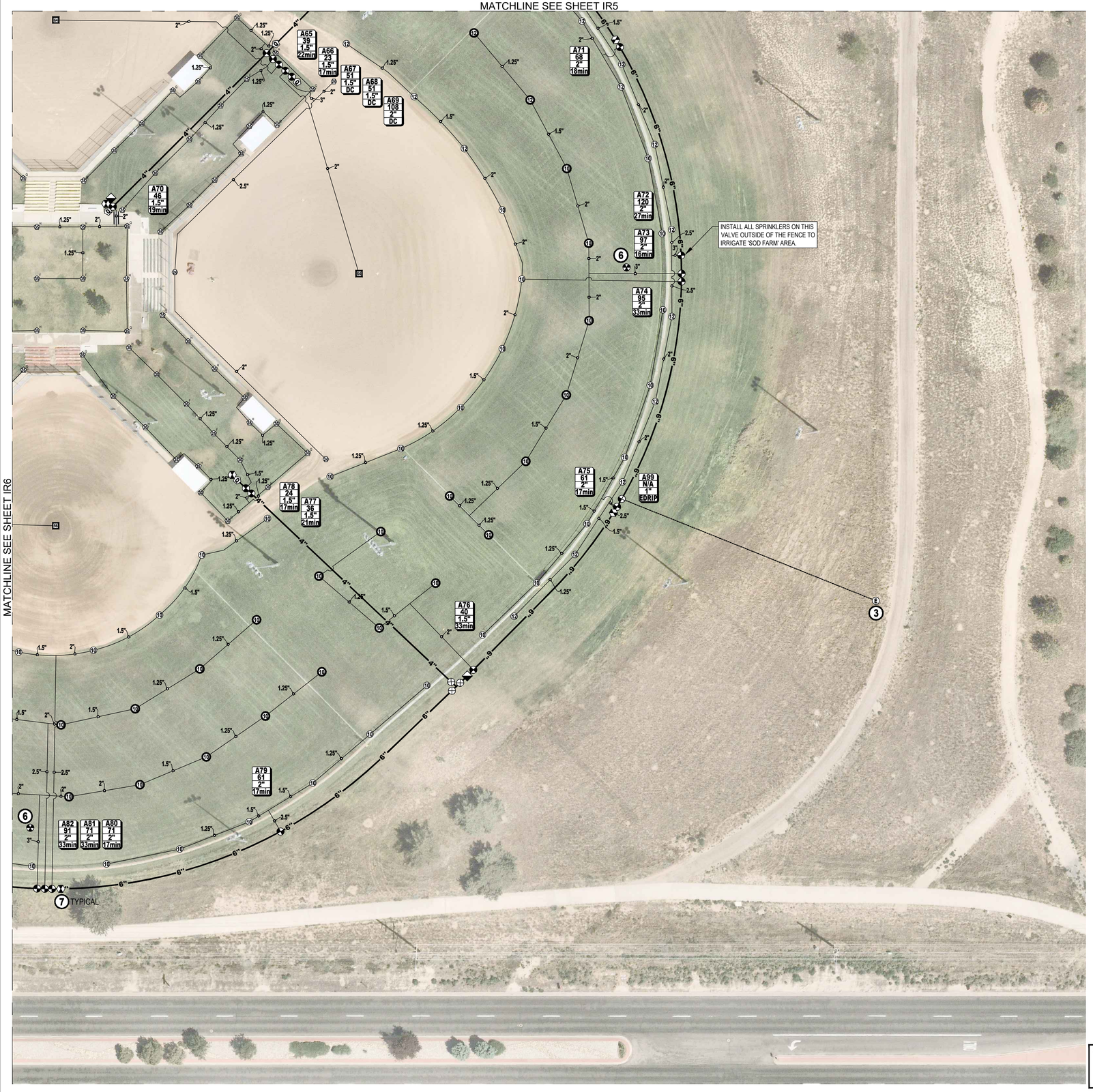

MATCHLINE SEE SHEET IR6

LEGEND

- SLEEVING: CL 200 PVC, REFER TO SPECIFICATIONS FOR SIZING
- IRRIGATION MAINLINE PIPE: 2.5" AND SMALLER: SCH 40 PVC, 3" AND LARGER: CL 200 PVC, SIZE AS SHOWN
- SPRINKLER LATERAL PIPE: SCH 40 PVC, 1" UNLESS OTHERWISE NOTED
- 1" SCH 40 PVC SHRUB DRIP LATERAL PIPE
- POINT-OF-CONNECTION (P.O.C.) ASSEMBLY
- M — MASTER VALVE: 6" GRISWOLD 2160 NORMALLY OPEN
- F — FLOW SENSOR: 6" NETAFIM OCTAVE ULTRASONIC 36OCT06GAL1.0
- ISOLATION GATE VALVE: 2.5" AND SMALLER: NIBCO T-113-K
  3" AND LARGER: CLOW OR EQUAL, SIZE TO MATCH MAINLINE
- QUICK COUPLING VALVE: RAIN BIRD 5LRC
- AIR/VACUUM RELIEF VALVE: 2" WATERMAN AV-150
- MANUAL DRAIN VALVE: REFER TO DETAIL
- E — EXISTING DRIP VALVE TO BE REPLACED, REFER TO FLAG NOTE 3
- DRIP REMOTE CONTROL VALVE: RAIN BIRD XCZ-100-PRB-COM, SPEARS TRUE UNION BALL VALVE
- SPRINKLER REMOTE CONTROL VALVE: RAIN BIRD PESB, SPEARS TRUE UNION BALL VALVE, SIZE AS SHOWN

POP-UP SPRINKLER: RAIN BIRD MPR SERIES ON RD-04-S-P30-F

RADIUS: 12'	FLOW (GPM):	Q-0.65	H-1.30	F-2.60
RADIUS: 15'	FLOW (GPM):	Q-0.92	H-1.85	F-3.70

ROTOR SPRINKLER: RAIN BIRD 5004-SAM-PLUS-PRS-SS, 45 PSI

MPR NOZZLE	FLOW(GPM)	RADIUS(FEET)
25	Q-1.00 H-1.98 F-3.82	25'
30	Q-1.40 H-2.96 F-5.78	30'
35	Q-1.92 H-3.81 F-7.58	35'

ROTOR SPRINKLER: RAIN BIRD 8005-SS, 60 PSI

NOZZLE	FLOW(GPM)	RADIUS(FEET)
4	3.8	39'
6	6.1	45'
8	8.4	49'
10	10.1	53'
12	12	59'
16	15.9	65'
20	20.1	67''

ROTOR SPRINKLER: RAIN BIRD EAGLE 900S-80

NOZZLE	FLOW(GPM)	RADIUS(FEET)
56	43.5	85'
64	51	93'

ROTOR SPRINKLER: RAIN BIRD EAGLE 950S-80

NOZZLE	FLOW(GPM)	RADIUS(FEET)
24	36	84'

IRRIGATION CONTROL SYSTEM: BASELINE BL-3200X-R36-BMGR-PLUS
*INSTALL ONE BL-5201 DECODER WITH EACH SOLENOID VALVE
*INSTALL ONE BL-5201MV DECODER WITH EACH MASTER VALVE
*INSTALL ONE BL-5309 DECODER WITH EACH FLOW SENSOR
*CONTACT TRACY SHIELDS WHEN ORDERING: (970) 939-6134
*AUTHORIZED BASELINE EXTENDED WARRANTY CERTIFICATION TECHNICIAN TO PERFORM GROUNDING OHMS TEST AT CONTROLLERS AND ALONG TWO-WIRE PATH GROUNDING RODS. CONTROLLERS MUST BE GROUNDED TO 10 OHMS OR LESS, AND TWO-WIRE GROUNDING RODS (5-10 OHMS DESIRABLE) MUST BE 25 OHMS OR LESS. INCLUDES ALL FIELD INSPECTIONS AND SUBMISSION TO BASELINE FOR APPROVAL.

SURGE DEVICE ASSEMBLY: BASELINE BL-LA01, GROUND SYSTEM PER MANUFACTURER GUIDELINES

SOIL MOISTURE SENSOR: BASELINE biSENSOR BL-5315B, INSTALL PER MANUFACTURER'S GUIDELINES

R — RAIN SENSOR: RAIN BIRD RSD OR EQUAL

A1 / 77 / 2" / XXmin
- VALVE STATION
- FLOW (GPM)
- VALVE SIZE (INCHES)
- #min = ESTIMATED RUN TIME FOR SPRINKLERS TO APPLY 0.25", DC = INFIELD DUST CONTROL

VALVE BOXES: RAIN BIRD VB SERIES (OR APPROVED EQUAL) WITH PURPLE LIDS. REFER TO DETAILS FOR VALVE BOX SIZES.

N W E S

30' 0' 15' 30' 60'
1" = 30'
SCALE MUST MEASURE 1 INCH OR DRAWING IS NOT TO SCALE.

KEY MAP

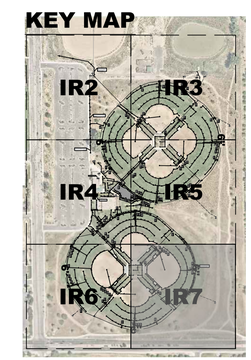

Aqua Engineering Inc.
Innovative Water Solutions

City of Greeley Colorado
Great. From the Ground Up.

Youth Sports Complex
Greeley, Colorado
Irrigation Plan

100%
CONSTRUCTION DOCUMENTS

DATE	December 18, 2019
DESIGNED BY	RJP/CBK
DRAWN BY	RJP
CHECKED BY	CBK

REVISIONS
-
-
-
-

SHEET NO.
IR7

File: O:\CGC\GYSC\P-GYSC.dwg printed by Ron Perez on 12/18/2019 10:44:28 AM using AutoCAD Version: 23.1s (LMS Tech)

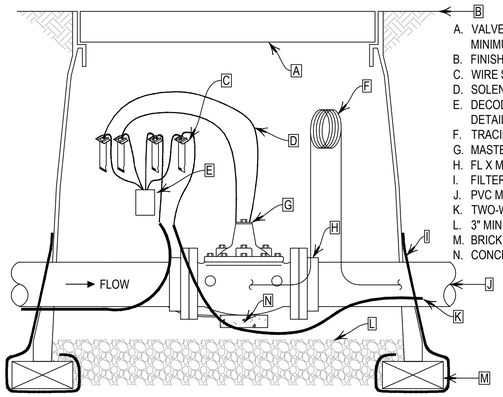

A. VALVE BOX WITH COVER (SIZE TO ALLOW FOR A MINIMUM OF 6" OF SPACE ON ALL SIDES)
B. FINISH GRADE
C. WIRE SPLICE
D. SOLENOID WIRES
E. DECODER, REFER TO 'DECODER INSTALLATION' DETAIL ON SHEET IR12
F. TRACING WIRE
G. MASTER VALVE
H. FL X MJ DUCTILE IRON W/ RESTRAINTS (1 OF 2)
I. FILTER FABRIC
J. PVC MAINLINE
K. TWO-WIRE CABLE
L. 3" MINIMUM DEPTH OF 3/4" WASHED GRAVEL
M. BRICK (1 OF 4)
N. CONCRETE SUPPORT BLOCK

NOTES:
1. INSTALL DECODER PER MANUFACTURER'S GUIDELINES.
2. USE VALVE BOX EXTENSION AS NECESSARY TO ACHIEVE A MINIMUM CLEARANCE OF 6" ABOVE ASSEMBLY.
3. NOMINAL SIZE OF ALL COMPONENTS ARE TO BE THE SAME NOMINAL SIZE AS THE MASTER VALVE.
4. INSTALL FILTER FABRIC AROUND EXTERIOR OF VALVE BOX. USE DUCT TAPE TO SECURE FABRIC TO PIPE AND VALVE BOX.
5. DO NOT CUT OUT ENDS OF VALVE BOX UNNECESSARILY.
6. POSITION VALVE BOX OVER MASTER VALVE TO ALLOW ACCESS TO SOLENOID.
7. INSTALL SO THAT GRAVEL IS ONLY IN CONTACT WITH BOTTOM OF VALVE ASSEMBLY.

1 MASTER VALVE ASSEMBLY M

N.T.S.

A. FINISH GRADE
B. PVC VAN STONE STYLE FLANGE (SIZE AS REQUIRED, 4 TOTAL)
C. SENSOR DECODER, REFER TO 'DECODER INSTALLATION' DETAIL ON SHEET IR12
D. WIRE SPLICE, TYPICAL
E. VALVE BOX WITH COVER. (SIZE VALVE BOX SO THERE IS A MINIMUM OF 6" OF CLEARANCE ON ALL SIDES OF SENSOR.) ADD EXTENSIONS AS REQUIRED
F. ULTRASONIC FLOW SENSOR (REFER TO LEGEND FOR MODEL)
G. FILTER FABRIC
H. TWO-WIRE CABLE
I. CONCENTRIC REDUCER (SIZE AS REQUIRED, 2 TOTAL)
J. PVC MAINLINE PIPE SAME SIZE AS SENSOR
K. AIR/VACUUM RELIEF VALVE
L. CONCRETE PAVER CENTERED UNDER SENSOR FOR SUPPORT
M. 3" MINIMUM DEPTH OF 3/4" WASHED GRAVEL
N. TRACING WIRE

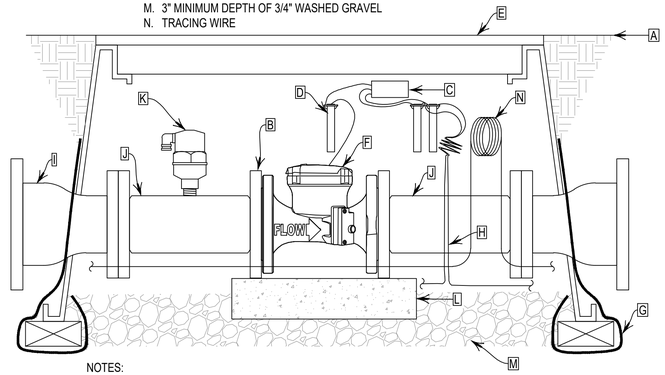

NOTES:
1. INSTALL SENSOR PER MANUFACTURER'S SPECIFICATIONS.
2. A MINIMUM LENGTH OF 2 PIPE DIAMETERS UPSTREAM AND DOWNSTREAM BETWEEN SENSOR AND FITTINGS IS REQUIRED FOR PROPER OPERATION OF SENSOR.
3. SUPPORT VALVE BOX WITH ONE BRICK PAVER UNDER EACH CORNER.

2 FLOW SENSOR F

N.T.S.

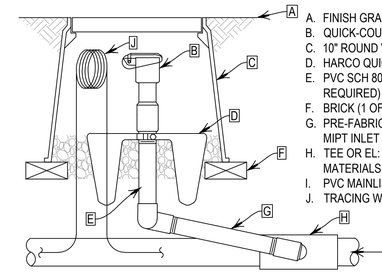

A. FINISH GRADE/TOP OF MULCH
B. QUICK-COUPLING VALVE
C. 10" ROUND VALVE BOX WITH COVER
D. HARCO QUICK COUPLER ANCHOR
E. PVC SCH 80 TOE NIPPLE (LENGTH AS REQUIRED)
F. BRICK (1 OF 2)
G. PRE-FABRICATED UNITIZED SWING JOINT 1" MIPT INLET X SOC OUTLET
H. TEE OR EL: SEE SPECIFICATIONS FOR MATERIALS
I. PVC MAINLINE PIPE
J. TRACING WIRE

NOTES:
1. FURNISH FITTINGS AND PIPING NOMINALLY SIZED IDENTICAL TO NOMINAL QUICK COUPLING VALVE INLET SIZE.
2. INSTALLATION HEIGHT OF QUICK COUPLER VALVE IN VALVE BOX MUST ALLOW PROPER OPERATION OF QUICK COUPLER KEY.
3. INSTALL SWING JOINT LAY ARM BETWEEN 30° AND 45° OF LATERAL PIPE IN ORDER TO ABSORB DOWNWARD IMPACT.

3 QUICK COUPLING VALVE ASSEMBLY Q

N.T.S.

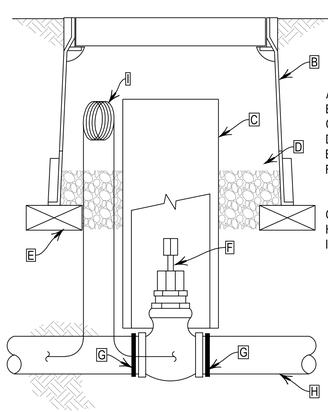

A. FINISH GRADE/TOP OF MULCH
B. 10" VALVE BOX WITH COVER
C. 6" PVC CL 200 PIPE (LENGTH AS REQUIRED)
D. 3" MINIMUM DEPTH OF 3/4" WASHED GRAVEL
E. BRICK (1 OF 2)
F. RESILIENT WEDGE GATE VALVE W/ 2" SQUARE OPERATING NUT, CONFORMING TO AWWA C550
G. JOINT RESTRAINT, REFER TO DETAIL
H. PVC MAINLINE
I. TRACING WIRE

NOTES:
1. NOMINAL SIZE OF GATE VALVE TO MATCH NOMINAL MAINLINE SIZE.

4 ISOLATION GATE VALVE ASSEMBLY (3" AND LARGER) ⊗

N.T.S.

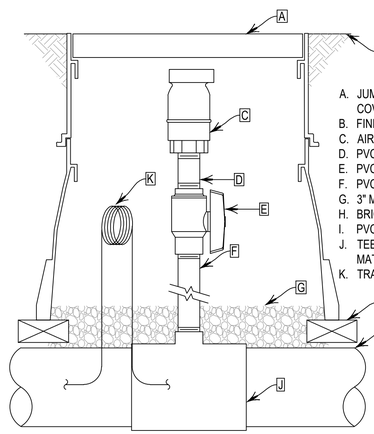

A. JUMBO VALVE BOX WITH EXTENSION AND COVER (HEIGHT AS REQUIRED)
B. FINISH GRADE/TOP OF MULCH
C. AIR VACUUM RELIEF VALVE
D. PVC SCH 80 NIPPLE (LENGTH AS REQUIRED)
E. PVC SCH 80 BALL VALVE (SIZE 2")
F. PVC SCH 80 NIPPLE (LENGTH AS REQUIRED)
G. 3" MINIMUM DEPTH OF 3/4" WASHED GRAVEL
H. BRICK (1 OF 4)
I. PVC MAINLINE PIPE
J. TEE OR EL: SEE SPECIFICATIONS FOR MATERIALS
K. TRACING WIRE

NOTES:
1. OPEN BALL VALVE IN ASSEMBLY 1/4 TURN UNTIL IRRIGATION SYSTEM IS FULLY CHARGED WITH WATER.
2. CLOSE VALVE DURING WINTERIZATION AND OPEN 1/2 TURN AFTER WINTERIZATION OF SYSTEM TO PROTECT VALVE DURING FREEZING WEATHER.
3. REPLACE PVC BALL VALVE WITH BRASS BALL VALVE IN THE EVENT AN AIR VACUUM RELIEF VALVE WITH MALE INLET IS USED.

5 AIR\VACUUM RELIEF VALVE ASSEMBLY

N.T.S.

Aqua Engineering Inc.
Innovative Water Solutions

City of Greeley Colorado
Great. From the Ground Up.

Youth Sports Complex
Greeley, Colorado
Irrigation Details

100%
CONSTRUCTION DOCUMENTS

DATE	December 18, 2019
DESIGNED BY	RJP/CBK
DRAWN BY	RJP
CHECKED BY	CBK

REVISIONS
-
-
-
-

SHEET NO.
IR8

File: O:\COG\GYSC\P-GYSC.dwg printed by Ron Perez on 12/18/2019 10:44:29 AM using AutoCAD Version: 23.1s (LMS Tech)

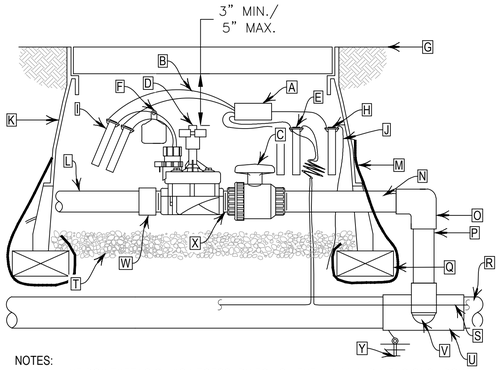

A. DECODER, REFER TO 'DECODER INSTALLATION' DETAIL
B. WIRE FROM DECODER TO VALVE SEE SPECIFICATIONS
C. PVC BALL VALVE
D. REMOTE CONTROL VALVE
E. WIRE CONNECTOR FROM TWO-WIRE CABLE TO DECODER (1 OF 2)
F. CHRISTY ID TAG
G. FINISH GRADE
H. WIRE CONNECTOR FROM DECODER GROUND WIRE TO BARE COPPER GROUNDING WIRE
I. WIRE CONNECTOR FROM DECODER TO SOLENOID VALVE (1 OF 2)
J. BARE COPPER GROUNDING WIRE TO GROUNDING PLATE/ROD SEE SPECIFICATIONS
K. JUMBO VALVE BOX WITH COVER (REFER TO LEGEND)
L. PVC LATERAL PIPE
M. FILTER FABRIC
N. PVC SCH 80 TOE NIPPLE (LENGTH AS REQUIRED)
O. PVC SCH 40 EL
P. PVC SCH 40 PIPE (LENGTH AS REQUIRED)
Q. BRICK PAVER (1 OF 4)
R. PVC MAINLINE
S. TWO-WIRE CABLE
T. 3" MINIMUM DEPTH OF 3/4" WASHED GRAVEL
U. TEE OR EL: SEE SPECIFICATIONS FOR MATERIALS
V. PVC SCH 80 TOE NIPPLE (LENGTH AS REQUIRED, HIDDEN) AND PVC SCH 40 EL
W. PVC SCH 40 MALE ADAPTER
X. PVC SCH 80 CLOSE NIPPLE
Y. GROUNDING PLATE/ROD (SEE DECODER GROUNDING SCHEMATIC)

NOTES:
1. USE VALVE BOX EXTENSION AS NECESSARY TO ACHIEVE MINIMUM DIMENSIONS ABOVE ASSEMBLY.
2. NOMINAL SIZE OF ALL COMPONENTS ARE TO BE THE SAME NOMINAL SIZE AS THE SOLENOID VALVE (SIZED AS SHOWN).
3. INSTALL FILTER FABRIC AROUND EXTERIOR OF VALVE BOX. USE DUCT TAPE TO SECURE FABRIC TO PIPE AND VALVE BOX.
4. TRANSITION TO PROPER LATERAL PIPE BURIAL DEPTH USING 45° ELBOW FITTINGS DOWNSTREAM OF REMOTE CONTROL VALVE ASSEMBLY.
5. DO NOT CUT OUT ENDS OF VALVE BOX UNNECESSARILY.
6. POSITION VALVE BOX OVER VALVE TO ALLOW ACCESS TO SOLENOID AND PROPER OPERATION OF BALL VALVE.
7. COIL 5-FEET OF WIRE FOR EACH DECODER FOR SERVICE PURPOSES.
8. SEE DECODER GROUNDING SCHEMATIC FOR ADDITIONAL DECODER GROUNDING INFORMATION.

1 REMOTE CONTROL VALVE ASSEMBLY

N.T.S.

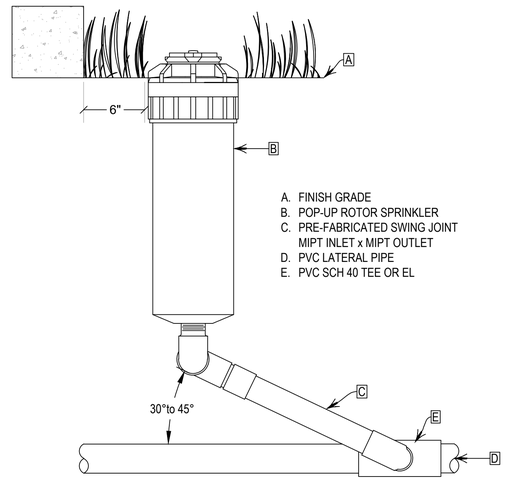

A. FINISH GRADE
B. POP-UP ROTOR SPRINKLER
C. PRE-FABRICATED SWING JOINT MIPT INLET x MIPT OUTLET
D. PVC LATERAL PIPE
E. PVC SCH 40 TEE OR EL

2 POP-UP ROTOR ASSEMBLY

N.T.S.

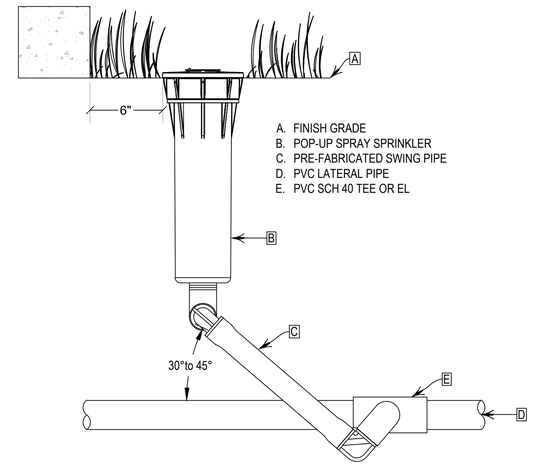

A. FINISH GRADE
B. POP-UP SPRAY SPRINKLER
C. PRE-FABRICATED SWING PIPE
D. PVC LATERAL PIPE
E. PVC SCH 40 TEE OR EL

3 POP-UP SPRAY SPRINKLER ASSEMBLY

N.T.S.

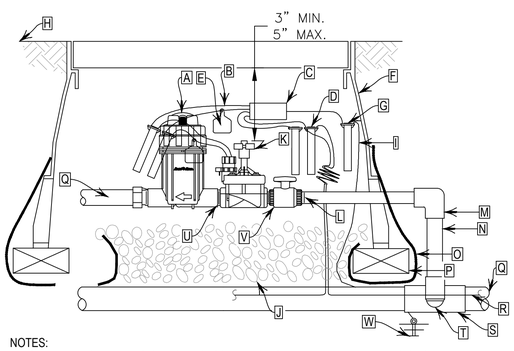

A. PRESSURE REGULATING FILTER
B. WIRE FROM DECODER TO VALVE SEE SPECIFICATIONS
C. DECODER, REFER TO 'DECODER INSTALLATION' DETAIL
D. WIRE CONNECTOR FROM TWO-WIRE CABLE TO DECODER (1 OF 2)
E. CHRISTY I.D. TAG
F. JUMBO VALVE BOX WITH COVER
G. WIRE CONNECTOR FROM DECODER GROUND WIRE TO BARE COPPER GROUNDING WIRE
H. FINISH GRADE/TOP OF MULCH
I. BARE COPPER GROUNDING WIRE TO GROUNDING PLATE/ROD SEE SPECIFICATIONS
J. 3" MINIMUM DEPTH OF 3/4" WASHED GRAVEL
K. REMOTE CONTROL VALVE
L. PVC SCH 80 TOE NIPPLE
M. PVC SCH 40 EL
N. PVC SCH 40 PIPE (TYPICAL) (LENGTH AS REQUIRED)
O. FILTER FABRIC
P. BRICK PAVER (1 OF 4)
Q. PVC MAINLINE. SEE NOTE 9.
R. TWO-WIRE CABLE
S. TEE OR EL: SEE SPECIFICATIONS FOR MATERIALS
T. PVC SCH 80 TOE NIPPLE (LENGTH AS REQUIRED, HIDDEN) AND PVC SCH 40 EL
U. PVC SCH 80 NIPPLE
V. PVC BALL VALVE
W. GROUNDING PLATE/ROD (SEE DECODER GROUNDING SCHEMATIC)

NOTES:
1. USE VALVE BOX EXTENSION AS NECESSARY TO ACHIEVE MINIMUM DIMENSIONS ABOVE ASSEMBLY.
2. NOMINAL SIZE OF ALL COMPONENTS ARE TO BE THE SAME NOMINAL SIZE AS THE SOLENOID VALVE (SIZED AS SHOWN).
3. INSTALL FILTER FABRIC AROUND EXTERIOR OF VALVE BOX. USE DUCT TAPE TO SECURE FABRIC TO PIPE AND VALVE BOX.
4. TRANSITION TO PROPER LATERAL PIPE BURIAL DEPTH USING 45° ELBOW FITTINGS DOWNSTREAM OF REMOTE CONTROL VALVE ASSEMBLY.
5. DO NOT CUT OUT ENDS OF VALVE BOX UNNECESSARILY.
6. POSITION VALVE BOX OVER VALVE TO ALLOW ACCESS TO SOLENOID, AND PROPER OPERATION OF BALL VALVE.
7. COIL 5-FEET OF WIRE FOR EACH DECODER FOR SERVICE PURPOSES.
8. SEE DECODER GROUNDING SCHEMATIC FOR ADDITIONAL DECODER GROUNDING INFORMATION.
9. IN CASES OF DIRECT DRIP LATERAL PIPE CONNECTION INSTALL SCH. 40 PVC BARB FITTING TO PRESSURE REGULATING BASKET. SECURE CONNECTION WITH STAINLESS STEEL PINCH CLAMPS.

4 DRIP REMOTE CONTROL VALVE ASSEMBLY

N.T.S.

Aqua Engineering Inc.
Innovative Water Solutions

City of Greeley Colorado
Great. From the Ground Up.

Youth Sports Complex
Greeley, Colorado
Irrigation Details

100%
CONSTRUCTION DOCUMENTS

DATE	December 18, 2019
DESIGNED BY	RJP/CBK
DRAWN BY	RJP
CHECKED BY	CBK

REVISIONS
-
-
-
-

SHEET NO.
IR9

File: O:\COG\GYSC\P-GYSC.dwg printed by Ron Perez on 12/18/2019 10:44:30 AM using AutoCAD Version: 23.1s (LMS Tech)

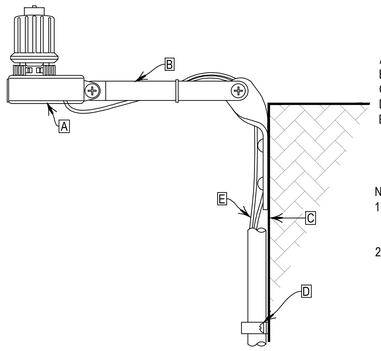

A. RAIN SENSOR
B. MOUNTING BRACKET
C. BUILDING FASCIA
D. SECURE CONDUIT
E. WIRE TO IRRIGATION CONTROLLER IN ELECTRICAL CONDUIT (CONNECT TO CONTROLLER COMMON WIRE PER MANUFACTURER'S INSTRUCTIONS)

NOTES:
1. MOUNT RAIN SENSOR IN SUITABLE LOCATION ON BUILDING WALL PER MANUFACTURER'S INSTRUCTIONS.
2. THE WIRELESS RAIN SENSOR MAY BE USED IN LIEU OF THE WIRED RAIN SENSOR. RAIN SENSOR MUST BE INSTALLED PER MANUFACTURER'S INSTRUCTIONS.

1 RAIN SENSOR ASSEMBLY

N.T.S.

1. STRIP ENDS OF WIRE
2. SECURE WIRES INTO WIRE NUT
3. INSERT WIRE NUT INTO GEL-FILLED TUBE
4. POSITION WIRES INTO CHANNELS
5. CLOSE SPLICE KIT FOR SECURED SEAL

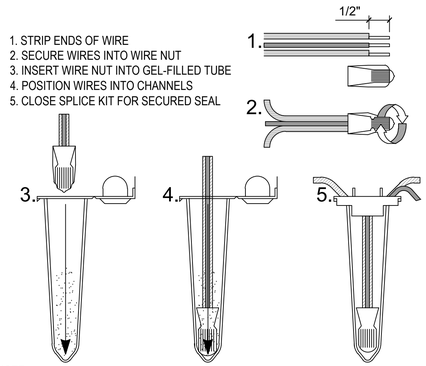

NOTE:
1. VISUALLY CHECK THAT CONNECTOR IS BELOW LOCKING "FINGERS".

2 WIRESPLICE

N.T.S.

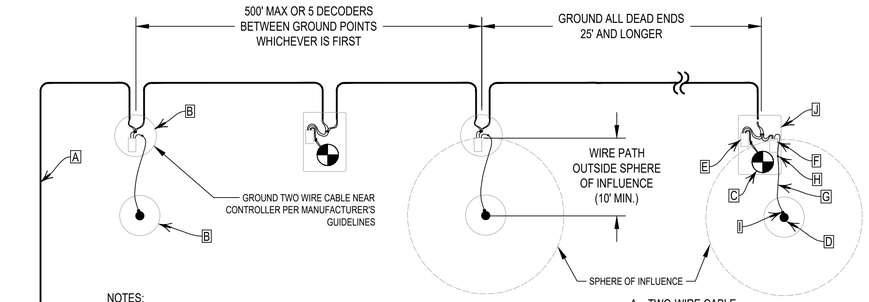

NOTES:
1. ALL WIRE CONNECTION SHALL BE MADE WITH APPROVED CONNECTORS.
2. MAKE ALL WIRE SPLICES IN VALVE BOXES.
3. LEAVE A MINIMUM OF 5' EXTRA WIRE AT ALL SPLICE POINTS.
4. TEST EARTH TO GROUND RESISTANCE AT ALL GROUND POINTS.
5. EARTH TO GROUND RESISTANCE MUST MEET OR EXCEED MANUFACTURER REQUIREMENTS.
6. INSTALL ALL GROUND ASSEMBLIES IN VALVE BOXES.
7. INSTALL GROUNDING EQUIPMENT AS INDICATED ON THE IRRIGATION DOCUMENTS AND AS RECOMMENDED BY THE MANUFACTURER.

A. TWO-WIRE CABLE
B. VALVE BOX (10" ROUND OR AS NECESSARY)
C. REMOTE CONTROL VALVE
D. 5/8" X 8' U.L. LISTED GROUND ROD
E. DECODER
F. LINE SURGE PROTECTOR
G. BARE AWG #10 COPPER WIRE
H. 3M DBR/Y-6 CONNECTION
I. BARE COPPER CONNECTION ("CADWELD")
J. REMOTE CONTROL VALVE ASSEMBLY

3 DECODER GROUNDING SCHEMATIC

N.T.S.

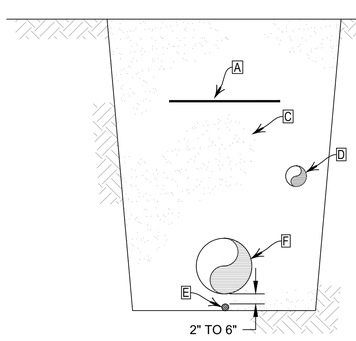

A. WARNING TAPE
B. FINISH GRADE
C. BACKFILL
D. LATERAL PIPE, 18" OF SOIL COVER
E. TWO WIRE CABLE
F. MAINLINE PIPE, 30" OF SOIL COVER

4 TRENCHING

N.T.S.

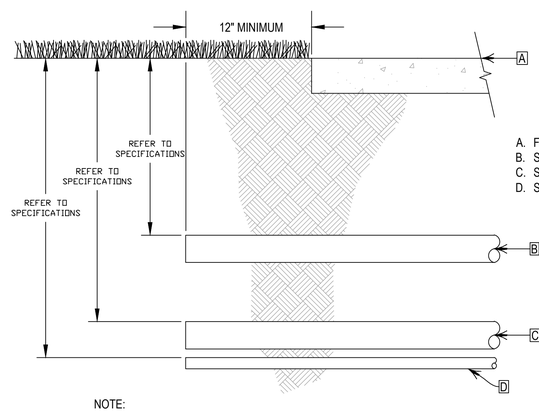

A. FINISHED GRADE OF PAVED SURFACE
B. SLEEVE FOR LATERAL PIPE
C. SLEEVE FOR MAINLINE PIPE
D. SLEEVE FOR WIRING

NOTE:
1. INSTALL SLEEVE SO THAT ITS LOWEST ELEVATION OCCURS AT ONE OR BOTH ENDS - NOT ALONG ITS LENGTH.

5 SLEEVING

N.T.S.

Aqua Engineering Inc.
Innovative Water Solutions

City of Greeley Colorado
Great. From the Ground Up.

Youth Sports Complex
Greeley, Colorado
Irrigation Details

100%
CONSTRUCTION DOCUMENTS

DATE	December 18, 2019
DESIGNED BY	RJP/CBK
DRAWN BY	RJP
CHECKED BY	CBK

REVISIONS
-
-
-
-

SHEET NO.
IR10

File: O:\CGC\GYSC\P-GYSC.dwg printed by Ron Perez on 12/18/2019 10:44:32 AM using AutoCAD Version: 23.1s (LMS Tech)

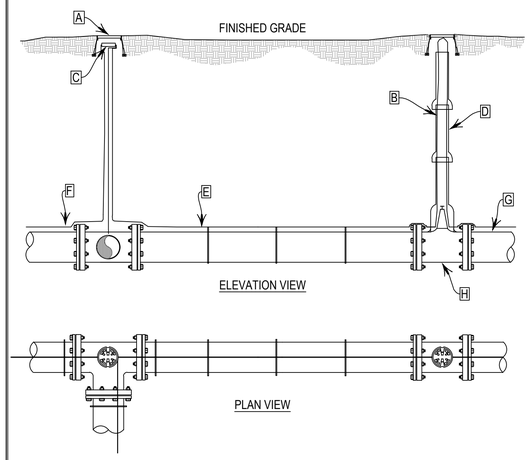

A. 10" ROUND VALVE BOX
B. INSTALL TRACING WIRE TO THE TOP OF VALVE BOX
C. WATER PROOF CONNECTION (SEE SPECIFICATIONS)
D. PIPE SLEEVE SEE VALVE DETAIL
E. TAPE COPPER WIRE TO TOP OF PIPE EVERY 10 FT.
F. CONTINUOUS LOOP COPPER TRACING WIRE (SEE SPECIFICATIONS)
G. PVC PIPE
H. TYP. VALVE

NOTE:
1. COPPER TRACING WIRE WILL START AT EACH PUMP STATION (DOGLEG DISCHARGE BELOW GRADE) AND WILL BE ROUTED WITH ALL MAINLINE PIPE AND CENTER PIVOT PIPE.
2. SPLICE TRACING WIRE IN IRRIGATION MAINLINE COMPONENT VALVE BOXES WHEN POSSIBLE, OTHERWISE, PLACE SPLICE IN SEPARATE VALVE BOX.

1 TRACING WIRE

N.T.S.

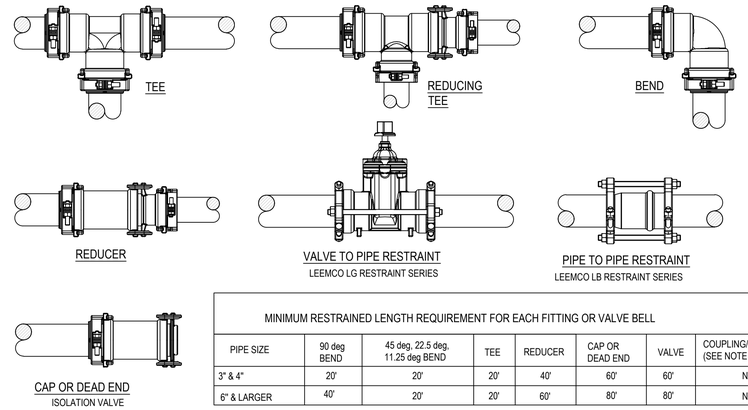

MINIMUM RESTRAINED LENGTH REQUIREMENT FOR EACH FITTING OR VALVE BELL

PIPE SIZE	90 deg BEND	45 deg, 22.5 deg, 11.25 deg BEND	TEE	REDUCER	CAP OR DEAD END	VALVE	COUPLING/SERVICE TEE (SEE NOTE 4)
3" & 4"	20'	20'	20'	40'	60'	60'	NONE
6" & LARGER	40'	20'	20'	60'	80'	80'	NONE

NOTES:
1. THE RESTRAINT SCHEMES HERE ARE FOR SYSTEM PRESSURES UP TO 125 PSI. FOR HIGHER PRESSURES, CALL THE LEEMCO FACTORY.
2. EACH FITTING AND VALVE BELL MUST BE RESTRAINED TO THE LENGTH OF PIPE NOTED IN THE TABLE USING FITTING TO PIPE RESTRAINT, VALVE TO PIPE RESTRAINT, AND PIPE TO PIPE RESTRAINT AS REQUIRED.
3. PIPE JOINTS WITHIN THE RESTRAINED LENGTH REQUIREMENT MUST BE RESTRAINED WITH PIPE TO PIPE RESTRAINTS.
4. SERVICE TEES AND COUPLINGS WITHIN THE RESTRAINED LENGTH REQUIREMENT MUST BE RESTRAINED WITH FITTING TO PIPE RESTRAINTS.

2 JOINT RESTRAINTS

N.T.S.

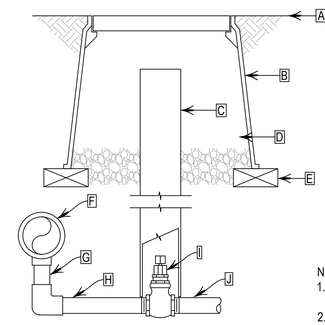

A. FINISH GRADE/TOP OF MULCH
B. 10" ROUND VALVE BOX WITH COVER
C. 4" PVC CL 200 PIPE (LENGTH AS REQUIRED)
D. 6" MINIMUM DEPTH OF 3/4" WASHED GRAVEL
E. BRICK (1 OF 4)
F. TEE OR EL ON LATERAL PIPE
G. PVC SCH 40 PIPE (LENGTH AS REQUIRED)
H. PVC SCH 80 TOE NIPPLE (LENGTH AS REQUIRED)
I. 2" RESILIENT WEDGE GATE VALVE W/ SQUARE OPERATING NUT, CONFORMING TO AWWA C550
J. PVC SCH 40 PIPE

NOTES:
1. SLEEVE TO BE SET SQUARE OVER GATE VALVE TO ALLOW FOR OPERATION OF VALVE WITHOUT BINDING.
2. FURNISH APPROPRIATE HANDLE AND KEY TO MATCH GATE VALVE.

3 MANUAL DRAIN VALVE ASSEMBLY

N.T.S.

A. LAWN OR SURFACE TREATMENT
B. 6" ROUND JUNCTION BOX
C. FINISHED GRADE
D. RECTANGULAR STANDARD OR JUMBO VALVE BOX AS REQUIRED
E. BURY DEPTH - biSENSOR
F. SLEEVED WIRE
G. biSENSOR - SET LENGTH HORIZONTALLY AND BLADE IN VERTICAL POSITION WITH WIRES OUT OF BOTTOM
H. SUPPORT BLOCK - 2 REQUIRED
I. LATERAL - SIZE PER PLANS
J. RED TO RED AND BLK TO BLK IN MOISTURE-RESISTANT SPLICE CAP. 3M DBR/Y OR EQUAL
K. 24 VOLT REMOTE CONTROL VALVE
L. TWO-WIRE - GAUGE AS PER PLAN
M. 12" WIRE BURY OR PER NEC
N. SUPPORT BLOCK - TYPICAL EACH CORNER (4 REQUIRED)
O. GRANULAR MATERIAL FOR DRAINAGE 2" MINIMUM DEPTH
P. PRESSURE LINE - SIZE PER PLAN

NOTE: THIS BOX MAY BE A VALVE BOX OR A ROUND BOX. IF A VALVE BOX WITH VALVE, CONNECT BICODER FOR VALVES TO TWO-WIRE AND WIRE TO THE BISENSOR.

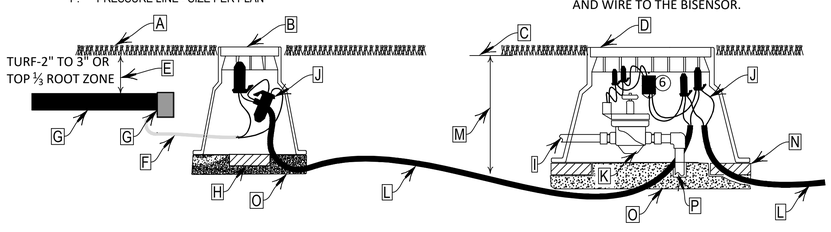

4 SOIL MOISTURE SENSOR ASSEMBLY

N.T.S.

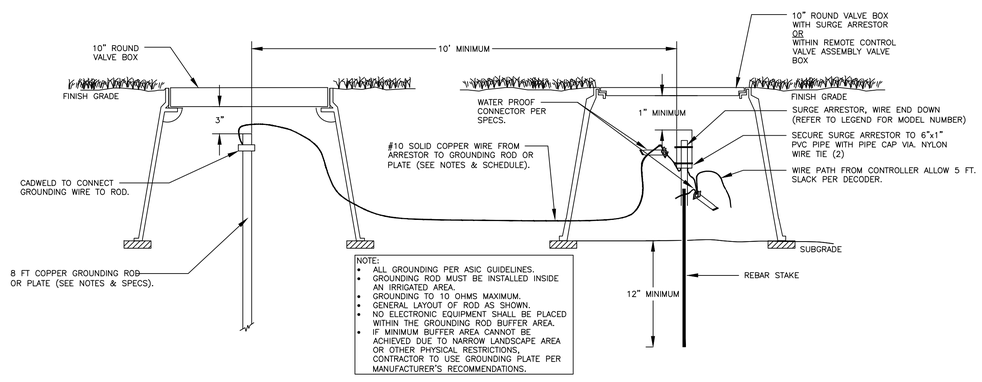

NOTE:
- ALL GROUNDING PER ASIC GUIDELINES.
- GROUNDING ROD MUST BE INSTALLED INSIDE AN IRRIGATED AREA.
- GROUNDING TO 10 OHMS MAXIMUM.
- GENERAL LAYOUT OF ROD AS SHOWN.
- NO ELECTRONIC EQUIPMENT SHALL BE PLACED WITHIN THE GROUNDING ROD BUFFER AREA.
- IF MINIMUM BUFFER AREA CANNOT BE ACHIEVED DUE TO NARROW LANDSCAPE AREA OR OTHER PHYSICAL RESTRICTIONS, CONTRACTOR TO USE GROUNDING PLATE PER MANUFACTURER'S RECOMMENDATIONS.

5 SURGE ARRESTOR

N.T.S.

Aqua Engineering Inc.
Innovative Water Solutions

City of Greeley Colorado
Great. From the Ground Up.

Youth Sports Complex
Greeley, Colorado
Irrigation Details

100%
CONSTRUCTION DOCUMENTS

DATE	December 18, 2019
DESIGNED BY	RJP/CBK
DRAWN BY	RJP
CHECKED BY	CBK

REVISIONS
-
-
-
-

SHEET NO.
IR11

File: O:\CGG\GYSC\P-GYSC.dwg printed by Ron Perez on 12/18/2019 10:44:33 AM using AutoCAD Version: 23.1s (LMS Tech)

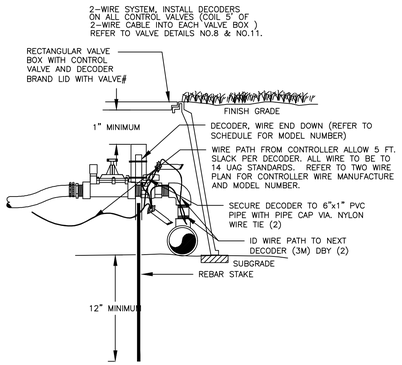

DECODER INSTALLATION

TWO-WIRE SYSTEM

2 COG

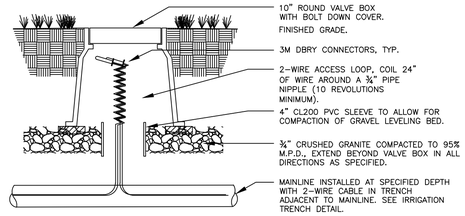

NOTE:
1. SET TOP OF BOX LEVEL WITH FINISHED GRADE IN TURF AREAS AND LEVEL WITH TOP OF MULCH IN SHRUB BEDS.
2. USE STANDARD RECTANGULAR VALVE BOX WITH BOLT DOWN LID FOR SPLICES OF MORE THAN TWENTY (20) WIRES.

WIRE SPLICE BOX

TWO-WIRE SYSTEM

4 COG

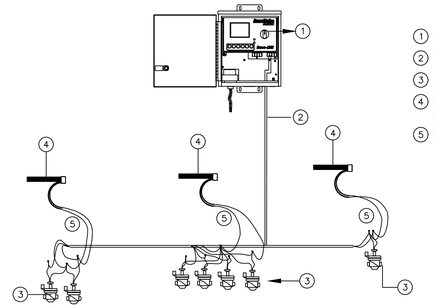

1. FIELD CONTROLLER
2. CONTROL VALVE WIRE
3. ZONE CONTROL VALVES: GROUPS IN SAME HYDROZONES
4. MOISTURE SENSOR: ONE PER TYPICAL HYDROZONE
5. MOISTURE SENSOR WIRING (50' INCLUDED WITH EACH SENSOR)

NOTE:

ONE MOISTURE SENSOR PER GROUPING OF CONTROL VALVES THAT HAVE SIMILIAR HYDROZONE CHARACTERISTICS.

CONNECT MOISTURE SENSOR TO ONE CONTROL VALVE WITHIN LIKE HYDROZONES. THAT CONTROL VALVE WILL BE THE HYDROZONE CONTROL AT THE CONTROLLER FOR THAT GROUPING WITHIN THE SAME HYDROZONE.

TYPICAL FIELD CONTROLLER DIAGRAM

9 COG

Aqua Engineering Inc.
Innovative Water Solutions

City of Greeley Colorado
Great. From the Ground Up.

Youth Sports Complex
Greeley, Colorado
City of Greeley Irrigation Details

100%
CONSTRUCTION DOCUMENTS

DATE	December 18, 2019
DESIGNED BY	RJP/CBK
DRAWN BY	RJP
CHECKED BY	CBK

REVISIONS
-
-
-
-

SHEET NO.
IR12

File: O:\COG\GYSC\P-GYSC.dwg printed by Ron Perez on 12/18/2019 10:44:34 AM using AutoCAD Version: 23.1s (LMS Tech)